WACKER NEUSON

all it takes!

Operator's Manual
Wheel Loader

WL1150



This Operator's Manual includes the AEM Safety Manual

AEM MEMBER

Vehicle Model	**A06-01**
Material Number	**1000519116**
Version	**1.1**
Date	**08/2025**
Language	**[en-US]**

Imprint

Publisher and copyright holder

Weidemann GmbH
Elfringhäuser Weg 24
34497 Korbach, Germany

Registered office: Korbach
Register court and number: Local Court Korbach, HRB 262
VAT ID No./VAT Number: DE 113 080 233/143 320 00021
Telephone: +49 (0)5631 501694-0
Fax: +49 (0)5631 501694-666

www.weidemann.de

Original operator's manual

This document may be used by the recipient only for the designated purpose. It may in no way be duplicated or translated in any other language, in whole or in part, without prior permission in writing from the manufacturer.

All rights reserved, in particular the copyright, the right of reproduction and the right of distribution applicable worldwide.Reproduction or translation of this publication, in whole or part, is not permitted without the written consent of Weidemann GmbH.

Violations of legal regulations, in particular of the copyright protection, will be subject to civil and criminal prosecution.

Weidemann GmbH reserves the right to change its products and their technical specifications for further technical development at any time without any claim to changes to machines already delivered. The information in the technical documentation supplied with the product applies in each case.

The machine on the cover is for illustration purposes only and may therefore have special equipment (options).

Weidemann GmbH, responsibility for errors or omissions not accepted, printed in Germany.

Copyright © 2025

California Proposition 65 Warning



⚠ WARNING

The engine exhaust from this product contains chemicals known to the State of California to cause cancer, birth defects, or other reproductive harm.



⚠ WARNING

Diesel engine exhaust and some of its constituents are known to the State of California to cause cancer, birth defects, and other reproductive harm.



⚠ WARNING

Cancer and Reproductive Harm

www.P65Warnings.ca.gov



⚠ WARNING

Batteries, battery posts, terminals and related accessories contain lead and lead compounds, and other chemicals known to the State of California to cause cancer and birth defects or other reproductive harm. WASH HANDS AFTER HANDLING.



Manufacturer declaration

Manufacturer

Weidemann GmbH, Elfringhäuser Weg 24, 34497 Korbach, Germany

Vehicle type	Wheel loader
Type/design	A05-01
Trade name	WL1150
Chassis number	WMWA0601JR0000105
Power kW at rated speed min-1	55/2200
Measured sound power level dB(A)	99,8
Guaranteed sound power level dB(A)	101

The following standards and/or technical specifications have been used to ensure proper implementation of the safety and health requirements specified in the EC directives:

2006/42/EG, 2000/14/EG, 2014/30/EU, DIN EN ISO 12100 and DIN EN 474-1 and 3

Authorized representative for the compilation of the technical documentation

Weidemann GmbH, Elfringhäuser Weg 24, 34497 Korbach, Germany

Korbach, _ _._ _._ _ _ _

Thomas Tilly
Managing Director

Bernd Apfelbeck
Managing Director

Illustration of the original Manufacturer's Declaration

Contents

1 Foreword

1.1 Operator’s manual ... 8
1.2 Warranty and liability ... 13

2 Usage

2.1 Use of the vehicle ... 14
2.2 Limits of the vehicle ... 15

3 Safety

3.1 Safety symbols and signal words ... 18
3.2 Qualification of operating personnel ... 19
3.3 Conduct ... 20
3.4 Operating ... 21
3.5 Lifting gear applications ... 24
3.6 Trailer operation ... 26
3.7 Operation of attachments ... 26
3.8 Towing, recovery, loading and transporting ... 28
3.9 Maintenance ... 30
3.10 Measures for avoiding risks ... 32

4 Vehicle Description

4.1 Vehicle view ... 38
4.2 Brief description ... 39
4.3 Operating elements at the operator station ... 41
4.4 Type plates and stickers ... 47

5 Putting into operation

5.1 Boarding and disembarking ... 59
5.2 Setting up the operator station ... 64
5.3 Display ... 73
5.4 Putting the vehicle into operation ... 88

6 Operation

6.1 Brakes ... 99
6.2 Steering ... 103
6.3 Drive ... 103
6.4 Driving with a trailer ... 115
6.5 Lighting and signaling system ... 118
6.6 Washer system ... 121
6.7 Heating, ventilation and air conditioning system ... 122
6.8 Working with the vehicle ... 124
6.9 Operating the front hydraulic connections ... 136
6.10 Operating the rear hydraulic connections ... 138
6.11 Operating electrical functions ... 140

6.12 Working with attachments 143

7 Transportation

7.1 Towing 154
7.2 Loading 159
7.3 Transportation 163

8 Maintenance

8.1 Information on maintenance 166
8.2 Maintenance accesses 167
8.3 Maintenance plan 168
8.4 Visual check 173
8.5 Vehicle fluids 174
8.6 Lubricating the vehicle and attachment 186
8.7 Cleaning and care 190
8.8 Braking system 199
8.9 Steering system 200
8.10 Electrical system 201
8.11 Working hydraulics 210
8.12 Engine 212
8.13 Cab 213
8.14 Tires 214

9 Troubleshooting

9.1 Faults, causes, remedy 218
9.2 Fault indications 220

10 Shutdown

10.1 Temporary shutdown 224
10.2 Permanent shutdown 225

11 Accessories

11.1 Attachments 227
11.2 Other accessories 227

12 Technical Data

12.1 Conversion table 228
12.2 Dimensions 229
12.3 Engine 230
12.4 Hydraulics 231
12.5 Emissions 232
12.6 Weights 233

13 Annex

13.1 Introduction 235
13.2 Warranty 235
13.3 Vehicle information 237

13.4 Inspection certificates 238

14 AEM Document Wheel Loader AEM Safety

Index 270

1 Foreword

1.1 Operator’s manual

1.1.1 Information about this operator’s manual

- The operator's manual provides information on the use, settings, operation and maintenance of the vehicle, including different attachments approved for the vehicle. The operator's manual is therefore intended for the operator and the operating company.
- This operator's manual also includes descriptions of additional equipment and options. These sections are not marked separately . The scope of description in the operator's manual can therefore deviate from the actual equipment present on your vehicle without a claim for retrofitting being able to be derived from this.
- The operator's manual and any amendments form part of the vehicle and must always be available at the place of use of the vehicle .
- Store this operator’s manual in the place provided for this in or on the vehicle.
- Immediately replace an incomplete or illegible operator's manual with a new one.
- In addition to the operator’s manual, observe statutory, generally applicable and other binding regulations on accident prevention and environmental protection.
- The manufacturer constantly keeps abreast of the latest technical developments and constantly improve its products. For this reason, we may from time to time need to make changes to figures and descriptions in this documentation that do not reflect products that have already been delivered and that will not be implemented on these vehicles.
- The units of measurement used in this operator's manual are specified according to the ISO standard.
- Technical specifications, dimensions and weights are not binding and correspond to the state at the time of printing. Error excepted.
- The specifications "left" and "right" in the descriptions always refer to the vehicle in the travel direction.
- For further questions about the vehicle and the operator’s manual, please contact your service partner at any time.

1.1.2 Storing the operator’s manual

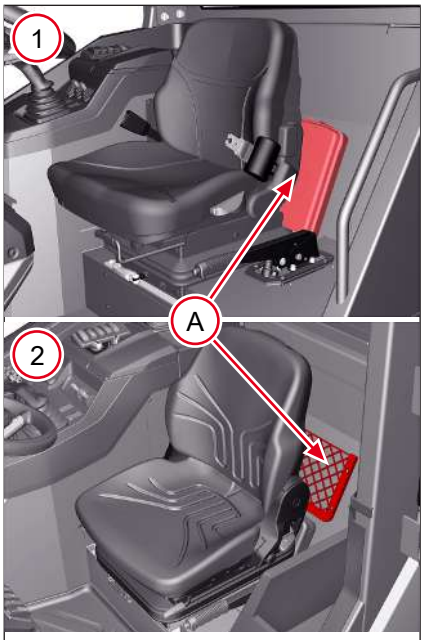

Fig. 1: Storage location for the operator’s manual

Item	Designation
1	Overhead guard equipment
2	Cabin equipment

The operator's manual and supplementary data, if any, form part of the vehicle and must be readily available to the operator at all times. The vehicle is equipped with a storage location for the operator’s manual.

The storage location is at position A on the driver's platform.

If required, the seat must be brought in the foremost position to reach the storage location.

1.1.3 Understanding these instructions

This section helps in understanding this operator's manual and the representations used in it.

Target group

On the one hand, this operator’s manual is intended for the operating personnel of the vehicle. It describes the safe and efficient operation of the vehicle.

On the other hand, this operator’s manual is intended for the operating company of the vehicle. It gives the information needed to take protective measures for the operating personnel, if necessary, and enable safe use of the vehicle. An operator can also be the operator of the vehicle at the same time.

This operator’s manual is also intended for the maintenance personnel of the vehicle. Work that is not described must not be carried out. For all other activities, contact the service partner or an authorized service center.

1.1.3.1 Key to the symbols

The symbols used in the operator’s manual are explained below. The symbols are used to make it easier to understand illustrations and instructions.

Symbol	Explanation
1., .2., 3...	Indicates an activity. The sequence of the actions must be followed.
⇨	Indicates a result or an intermediate result of an action.
✓	Indicates prerequisites that must be created for the activity.
●	Indicates enumerations, e.g. when several components are named one after the other.
-	Indicates a sub-list, e.g. if components consist of other components.

Symbol	Explanation
I	Indicates a position, usually a component or control element, in a graphic. The numbering can be consecutive or in Roman numerals.
1; **A**	Indicates the naming of components in explanatory texts. It is identical to the adjacent positions in graphics.
III III	Indicates a direction of movement or different positions of switches.
►	Indicates the avoidance of hazards in warning notices.
[►52]	Indicates a cross-reference in tables. Here e.g. reference to page 52

1.1.3.2 Explanation of symbols

The symbols used in the operator's manual are explained below. The symbols are used exclusively in warning or environmental instructions or information. Warnings must always be observed to protect the operator and third parties from personal injury and damage to property.



Symbol for warning notices

This symbol marks general warnings. It is used to alert you of possible hazards, e.g. risks of injury or accidents.

Symbol for explosions



This symbol is a warning symbol that indicates an explosion hazard. It is used to indicate special situations where there is an explosion hazard.

Symbol for crushing



This symbol is a warning symbol that indicates a hazard of crushing. It is used to indicate special situations where there is a hazard of crushing body parts. The hand symbol is used to represent all body parts.

Symbol for burns



This symbol is a warning symbol that indicates a hazard of burning. It is used to indicate special situations where there is a risk of burns due to hot surfaces, hot vapors or hot liquids.

Symbol for electrical voltage



This symbol is a warning symbol that indicates a hazard as a result electrical voltage. It is used to indicate special situations where there is a risk of injury due to electrical voltage.

Symbol for indications of technical damage



This symbol is a warning symbol that indicates a danger of technical damage. It is used to indicate situations where damage to the vehicle or third-party property may occur.



Symbol for environmental information

This symbol indicates environmental information. It is used to warn of possible environmental hazards.

Symbol for information

This symbol indicates information. This information may be, for example, tips for operation. It helps to better understand and use the machine.

1.1.3.3 Abbreviations

Abbreviations that may be used in the instructions are listed below. When an abbreviation is used for the first time, it is first written out in full and the abbreviation is placed in brackets. Generally known abbreviations (e.g., etc.) are not explained. If necessary, a brief explanation is placed in brackets.

Abbreviation	Meaning
Fig.	Number of the figure beneath an illustration
ABE	National Type Approval (Germany)
GTC	General terms and conditions
ATF	Automatic Transmission Fluid
OO	Operating hours
DGUV	German statutory accident insurance
DOC	Diesel Oxidation Catalyst (diesel oxidation catalyst - component in the exhaust aftertreatment system).
DPF	Diesel particulate filter (component in the exhaust aftertreatment system)
EBE	Authorization for stand-alone operation
ECS	Easy Coupler System
ECU	Electronic Control Unit (electronic control unit in the vehicle)
EG	European Community
FOPS	Falling Objective Protective System (protective structure against falling objects)
LED	Light-emitting diode
LWA	Sound power level
LPA	Sound pressure level
NHN	Normalhöhennull (in Germany the term for the specification of heights above sea level)
ROPS	Roll Over Protective Structure (protective structure against rollover)
SAE	Society of Automotive Engineers (viscosity class of oils)
StVZO	Road Traffic Licensing Regulations

1.1.4 Information for the buyer and operating company

- The buyer or operating company is responsible for the user’s/operators’ training in safe working on and with the vehicle.
  - We recommend repeating training at regular intervals.
- The buyer or operating company is responsible for ensuring that any additional safety regulations applicable in the country of use of the vehicle are followed.
- The operator in the Federal Republic of Germany is obliged to check regularly the vehicle and associated attachments to ensure they are in proper condition and safe to use.
  - In other countries, observe the relevant national regulations.
- At the beginning of this manual an illustration of the declaration of conformity is shown. The illustration shows the declaration of conformity without the data corresponding to the vehicle.
- The corresponding data for the vehicle varies depending on the equipment. The corresponding data is contained in the original declaration of conformity, which is supplied with the vehicle as an original document.

1.1.5 Information for the operator

- You must always obey the safety regulations in this operator's manual and the safety rules applicable in each case for operating the vehicle.
- The vehicle may only be operated by persons who are physically, mentally and professionally suited for this work.
- Persons under the influence of alcohol or drugs may not use the vehicle.
- The operator is the person operating and/or driving the vehicle.
- Before using the vehicle for the first time, the operator must receive the vehicle instructions.
- The operator must carefully read and understand the operator's manual before the first drive or the first operation. In particular the chapter on safety, see Safety on page 18.
- Before working with the vehicle, operators must familiarize themselves with all the control elements and their functions, and with the handling of the vehicle.
- Before commissioning the vehicle, the operator of the vehicle must ensure that it is in a perfect condition, and during operation, the operator must observe the regulations regarding operation.
- The operator is responsible for ensuring that the vehicle and its use do not pose a risk.
- Work on the vehicle may only be performed by instructed technically trained personnel that has been authorized by the operating company. Any person involved in operation, care, maintenance, servicing, repair work or transport of the vehicle must read, understand and follow the complete instructions in the operator’s manual and in particular the safety instructions.
- Observe and follow the legal regulations of your country.

1.2 Warranty and liability

1.2.1 Warranty

Warranty claims can be made only if the conditions of warranty have been observed. They are included in the General Conditions of Sales and Delivery for new vehicles and spare parts sold by the dealers. Furthermore, the instructions of this operator's manual are to be observed.

1.2.2 Limitations of liability

In the event of the following infringements, the manufacturer disclaims any liability for personal injury and damage to property:

- Actions contrary to this operator’s manual.
- Non-designated use
- Deployment of untrained personnel.
- Use non-approved spare parts and accessories.
- Improper handling.
- Structural changes of any kind.
- Non-observance of the General Terms and Conditions (GTC).

2 Usage

2.1 Use of the vehicle

2.1.1 Intended use

The following chapter describes the range of application of the vehicle. The listed works were classified by the manufacturer as intended and thus as safe.

The vehicle may only be operated in accordance with its intended purpose, safety and danger-consciously, taking into account the operator's manual and in a technically perfect condition. In particular, faults that can impair safety must be eliminated immediately!

The vehicle is used to carry out work cycles. A work cycle consists of picking up, raising, transporting and unloading material. The material must correspond to the use of the attachment, e.g. move solid earth with only one earth bucket. The safety instructions, warning notices and regulations listed in this operator's manual must be observed for each work cycle.

Approved attachments can change the intended use of the vehicle (e.g. pallet fork). Ensure that only attachments approved for the vehicle are used with any necessary additional equipment.

Intended use also includes observing the operator's manual and observing the maintenance conditions!

Any other or more use of the vehicle beyond this is not intended!

2.1.2 Unintended use

The manufacturer is not liable for personal injury or damage to property resulting from unintended use. Among other things, the following activities with the vehicle are not intended:

- Lifting or transporting persons in the vehicle or attachment.
- Using the vehicle as a working platform.
- Lifting or transporting loads without the attachment being designed for this purpose.
- Using the vehicle after a malfunction or damage without having it professionally repaired.
- Using the vehicle after major modifications have been made.
- Using the vehicle for demolition or forestry applications where there is a risk of falling objects.

2.1.3 Reasonably foreseeable misuse

Not using the vehicle according to its designated use means that it is used for an application that is not specified by the manufacturer. Therefore, this is misuse in the terms of the Machinery Directive. The operator is solely liable for any resulting damage.

The manufacturer is obliged to identify foreseeable misapplications by means of market observation measures. The following lists are examples of such foreseeable misuse. The list does not claim to be exhaustive:

- The use of areas and rooms that are not described as work or maintenance areas in these operator’s manual.
- Carrying out operating, cleaning or maintenance work contrary to information in operator's manual.
- Carrying out maintenance work or troubleshooting while drives or diesel engines are running.
- Non-observance of safety and warning notices in this operator’s manual or on the vehicle (safety labels).
- Carrying out maintenance work that is not described in this operator’s manual.
- Performance of maintenance work by inadequately trained personnel.
- The unauthorized modification of the vehicle and its attachment.
- Using the vehicle with non-approved attachments.
- The use of non-approved or non-original spare parts.
- The use of the vehicle for crop protection and fertilizer application.
- Use as carrier vehicle for attachments not authorized or approved by the manufacturer.
- The use of the vehicle for forestry or forest work.
- The use of the vehicle in waters or floodplains.
- The transport of persons in the vehicle or attachment.
- Using the vehicle in potentially explosive atmospheres.
- Using the vehicle in contaminated areas.
- Installation of work platforms.

2.2 Limits of the vehicle

2.2.1 Notes on vehicle limitations

Use outside the limits is a use not intended by the vehicle manufacturer and thus represents misuse within the meaning of the Machinery Directive. The operator is solely liable for any resulting personal injury or damage to property.

2.2.2 Spatial limits of the vehicle

The vehicle is not to be used in the following areas:

- Partial or complete operation under water
- Below-ground or mining applications
- Operation in enclosed areas
- Operation in potentially explosive areas
- Operation in contaminated areas

2.2.3 Climatic limits of the vehicle

The application range for the vehicle is between -15 °C and +40 °C.

Operating temperatures below -15 °C or above +45 °C require special equipment or vehicle fluids (fuel, motor oil and hydraulic oil).

The service partner is available at any time to answer any further questions regarding use in extreme temperature ranges.

2.2.4 Precautions for different weather conditions

At temperatures above 40°C

Perform the following activities more often than described in the chapter Maintenancesee Maintenance on page 166.

- Check the cooling system regularly.
  - Keep the radiator and, if necessary, the condenser of the air conditioning system clean.
  - Make sure that the coolant level is correct.
  - Use coolant with the prescribed mixing ratio.
  - Check the cooling system regularly for leaks.
  - Check the fan blades of the cooling system regularly for damage.
  - Check the drive of the fan blade regularly for wear.
- Fill engine oil according to table with operating fluids, see Vehicle fluids on page 174.
- Check and clean the air filter regularly, especially in dusty environments.

At temperatures below -15°C



NOTICE

At temperatures below -15 °C, an additional starting aid is required, e.g. fuel, engine oil or coolant heaters.

► Do not connect two batteries in series to generate a starting voltage of 24 volts.

Avoid damage to the vehicle and facilitate vehicle start up by taking the following measures.

- Use the correct mixing ratio of coolant.
- Use engine oil of the correct viscosity class.
- Use fuel designed for low temperatures.
- Fill the fuel level completely at the end of the work shift.
- Ensure that the battery is always fully charged.
- Have a cold start aid installed by an authorized service center (e.g. engine and hydraulic oil preheating).

3 Safety

3.1 Safety symbols and signal words

The following symbol identifies safety instructions. It is used for warning against potential personal risk or danger.



⚠ DANGER

DANGER identifies a situation causing death or serious injury if it is not avoided.

Consequences in case of non-observance.

► Avoidance of injury or death.



⚠ WARNING

WARNING identifies a situation that can cause death or serious injury if it is not avoided.

Consequences in case of non-observance.

► Avoidance of injury or death.



⚠ CAUTION

CAUTION identifies a situation that can cause injury if it is not avoided.

Consequences in case of non-observance.

► Avoidance of injury.



NOTICE

INFORMATION identifies a situation that causes damage if it is not observed.

Consequences in case of non-observance.

► Avoidance of damage to property.

3.2 Qualification of operating personnel

3.2.1 Owner’s duties

- Only allow specifically authorized, trained and experienced persons to operate, drive and perform maintenance on the vehicle.
- Do not allow persons to be trained or instructed by anyone other than an authorized and experienced person.
- Have persons to be trained or instructed practice under supervision until they are familiar with the vehicle and its behavior (for example with the steering and braking behavior).
- Access to the vehicle or vehicle operation is prohibited for children and persons under the influence of alcohol, drugs or medicine.
- Clearly and unequivocally define the responsibilities of the operating and maintenance personnel.
- Clearly and unequivocally define the responsibilities on the work area, also in view of traffic regulations.
- Give the operator the authority to refuse safety instructions from third parties.
- Have the vehicle serviced and repaired only by an authorized service center.

3.2.2 Required knowledge of the operator

- The operator is responsible for third parties.
- Avoid any operational mode that might pose a risk to safety.
- The specific national driving license is required.
- The vehicle may only be operated by authorized and safety-conscious persons.
- The operator and owner are obligated to operate the vehicle only in a safe and working condition.
- All persons working on or with the vehicle must have read and understood the safety instructions in this operator’s manual before starting work.
- Follow, and instruct the operator in, legal and other mandatory regulations relevant to accident prevention.
- Observe and instruct the operator in regulations regarding road traffic and environmental protection.
- Use only the defined accesses for getting on and off the vehicle.
- Be familiar with the emergency exit of the vehicle.

3.2.3 Preparatory measures for the operator

- Before starting, check the vehicle whether it can be driven and operated safely.
- Increased caution if the driver has untied, long hair or wears jewelry.
- Wear close-fitting work clothes that do not hinder movement.

3.3 Conduct

Prerequisites for operation

- The vehicle has been designed and built in accordance with state-of-the-art standards and the recognized safety regulations. Nevertheless its use can cause danger to the operator or third parties, or damage to the vehicle.
- Store this operator's manual in the place provided for this in or on the vehicle. Immediately replace a damaged or illegible operator's manual and any supplements to it.
- The vehicle must only be operated in accordance with its designated use and the instructions set forth in this operator's manual.
- The operator and owner are obligated to operate the vehicle only in a safe and working condition.
  - If a damage or malfunction occurs during operation, put the vehicle out of operation immediately and secure it against restart.
  - Have all malfunctions jeopardizing the safety of the operator or third parties immediately repaired by an authorized service center.
- Do not put the vehicle into operation or operate it after an accident; have it inspected for damage by an authorized service center.
  - Have the seat belt replaced by an authorized service center after an accident, even if there is no visible damage.
  - Pay particular attention to damage to the cab and protective structures.
- Keep climbing aids (handholds and footholds) free from dirt, snow and ice.
- The owner is responsible for requiring the operating and maintenance personnel to wear protective equipment as required by the circumstances.

3.4 Operating

3.4.1 Preparative measures

- Operation is only allowed with correctly installed and intact protective structures.
- Keep the vehicle clean. This reduces injury, accident and fire hazards.
- Safely store objects you carry with you in the places provided for this (for example in the storage compartment, drinks holder).
- Do not carry objects with you that protrude into the operator’s work space. They can create another danger in case of an accident.
- Observe all safety and information labels.
- Start and operate the vehicle only with the seat belt fastened and only from the place provided for this.
- Check the condition and the fastening of the seat belt. Have malfunctioning seat belts and mounting hardware replaced by an authorized service center.
- Before starting work, adjust the seating position so that all control elements can be reached and fully operated.
- Only make personal settings when the vehicle is at a standstill (e.g. seat, steering column).
- Ensure that all safety devices are properly installed and functional before starting work.
- Before starting work or after interrupting work, ensure that the brake, steering, signaling and light systems are functional.
- Before commissioning the vehicle, ensure that nobody is in the danger zone.

3.4.2 Job site

- The operator is responsible for third parties.
- Before starting work, familiarize yourself with the job site. This applies to, for example:
  - Obstacles in the work area and vehicle travel area.
  - Any barriers separating the job site from public roads.
  - Load-bearing capacity of the soil.
  - Existing overhead and underground lines.
  - Special operating conditions (e.g. dust, steam, smoke, asbestos).
- The operator must know the maximum dimensions of the vehicle and the attachment.
- Maintain a safe distance (e.g. from buildings, edges of building pits).
- When working in buildings or in enclosed areas, pay attention to:
  - Ceiling heights and passage heights.
  - Width of the entrances and passages.
  - Maximum ceiling load and maximum ground load.
  - Sufficient room ventilation (e.g. danger of carbon monoxide poisoning).
- Use existing visual aids to stay aware of the danger zone.
- In conditions of darkness and poor visibility, switch on existing work lights and ensure that motorists are not blinded by these lights.
- If the existing lights of the vehicle are not sufficient for performing work safely, ensure additional lighting of the job site.
- Hot vehicle parts and exhaust gases increase the risk of fire.

3.4.3 Danger zone

- The danger zone is the area in which persons are at risk by the movements of the vehicle, the attachment or the load.
- The danger zone also includes the area that can be reached by falling load, a falling device or ejected parts.
- Extend the danger zone sufficiently in the immediate vicinity of buildings, scaffolds or other elements of construction.
- Seal off the danger zone should it not be possible to keep a sufficient safety distance.
- When persons are in the danger zone, stop work immediately.

3.4.4 Transporting passengers

- Transporting passengers with the vehicle is not allowed.
- Transporting persons on and in attachments is not permitted.
- Transporting persons on and in trailers is not permitted.

3.4.5 Mechanical integrity

- The operator and owner are obligated to operate the vehicle only in a safe and working condition.
- Only operate the vehicle if all protective and safety-related equipment (e.g. protective structures such as cab or roll bar, detachable protective devices) are installed and functional.
- Check the vehicle for visible damage and defects.
- If a damage or malfunction occurs during operation, put the vehicle out of operation immediately and secure it against restart.
- Have all malfunctions jeopardizing the safety of the operator or third parties immediately repaired by an authorized service center.

3.4.6 Starting the engine of the vehicle

- Start the engine only according to the operator's manual.
- Observe all warning lights and control lights.
- Do not use any liquid or gaseous starting aids (e.g. ether or starting fuel).

3.4.7 Vehicle operation

- Start and operate the vehicle only with the seat belt fastened and only from the place provided for this.
- Put the vehicle into operation only if visibility is sufficient (have another person guide you if necessary).
- When parking on slopes:
  - Travel or work only uphill or downhill.
  - Avoid vehicle travel across a slope, observe the vehicle's permissible inclination (and of the trailer if necessary).
  - Keep loads on the uphill side of the vehicle and as close as possible to it.
  - Keep attachments close to the ground.
- Adapt the travel speed to the circumstances (e.g. the ground conditions, weather conditions).
- There is increased danger during backward vehicle travel. Persons in the blind spot of the vehicle cannot be seen by the operator.
  - Ensure that nobody is in the danger zone when you change the travel direction.
- Never get on a moving vehicle and never jump off the vehicle.

3.4.8 Vehicle travel on public roads and sites

- The specific national driving license is required.
- When driving on public roads or sites, observe the national regulations (e.g. road traffic regulations).
- Ensure that the vehicle is in compliance with the national regulations.
- In order not to blind other motorists, using the existing work lights during vehicle travel on public roads or sites is prohibited.
- When crossing underpasses, bridges, tunnels, e.g. ensure that the clearance height and width is sufficient.
- The mounted attachment must be approved for driving on public roads or sites (see the registration papers).
- When transferring the vehicle on public roads, the attachment must be brought into transport position and emptied.
- The prescribed lighting and protective devices must be mounted on the attachment.
- Take measures against unintentional operation of the working hydraulics.

3.4.9 Parking the vehicle

Stopping the engine of the vehicle

- Stop the engine only according to the operator's manual.
- Before stopping the engine, lower the attachment to the ground.

3.4.10 Securing the vehicle

- Secure the vehicle from rolling away before leaving the vehicle (e.g. parking brake, suitable chocks).
- Remove the starting key and secure the vehicle against unauthorized operation.

3.5 Lifting gear applications

3.5.1 Requirements

- Have loads fastened and the operator guided by a qualified person who has specific knowledge of lifting gear applications and the usual hand signals.
- The person giving instructions to the operator must stay in visual contact with the operator when fastening, guiding or removing the load (maintain visual contact).
- If this not be possible, ask one more person with the same qualifications to guide.
- The operator may not leave his seat as long as the load is raised.

3.5.2 Fastening, guiding and removing loads

- Follow the applicable specific regulations for fastening, guiding and removing a load.
- Wear protective equipment when fastening, guiding and removing loads (e.g. a hard hat, safety glasses, protective gloves, safety shoes).
- Do not place lifting and fastening gear over sharp edges or rotating parts. Loads must be fastened so as to prevent them from slipping or falling.
- Move loads only on horizontal, level and firm ground.
- Move loads close to the ground.
- In order to avoid oscillating movements of loads:
  - Perform smooth, slow movements with the vehicle.
  - Use cables to guide the load (do not use hands to guide).
  - Bear in mind the weather conditions (for example the wind force).
  - Keep a minimum safety distance from objects.
- The operator may allow the load to be fastened and removed only if the vehicle and its attachment are not being moved.
- Danger zones must not overlap with the work zones of other vehicles.

3.5.3 Lifting gear applications

- The vehicle and the attachment must be certified for lifting gear applications.
- Observe the national regulations for lifting gear applications.
- Lifting gear applications are procedures involving raising, transporting and lowering loads with the help of lifting and fastening gear.
- The help of an accompanying person is necessary for fastening, guiding and removing the load.
- There must be nobody under the load.
- Stop the vehicle immediately and stop the engine if persons enter the danger zone.
- Only operate the vehicle in lifting gear applications if the prescribed lifting gear (e.g. joint rod linkage and load hook) and safety equipment are present and functional (e.g. visual and audible warning equipment, line break protection, stability table).
- Use only lifting and fastening gear certified by a test or certification body, observe the inspection intervals. Adhere to the inspection intervals .
- Only use undamaged attachments and shackles. No belts, slings or cables.
- Do not use any lifting and fastening gear that is dirty, damaged or not of sufficient size.
- Do not interrupt the work process with a load attached.

3.6 Trailer operation

- The vehicle must be certified for trailer operation.
- Observe the national regulations for trailer operation.
- The specific national driving license is required.
- Transporting persons on and in trailers is not permitted.
- Observe the maximum permissible drawbar load and trailer load.
- Do not exceed the permissible trailer speed.
- Trailer operation with the towing gear of the vehicle is prohibited.
- Trailer operation changes the vehicle's operating behavior; the operator must be familiar with this and act accordingly.
- Bear in mind the vehicle's steering mode and the trailer's turning circle.
- Before coupling/uncoupling the trailer, secure it to prevent it from rolling away (e.g. with the parking brake, suitable wheel chocks).
- There must be nobody between the vehicle and the trailer when hitching a trailer.
- Couple the trailer onto the vehicle correctly.
- Ensure that all equipment works correctly (for example the brakes, lights).
- Before starting vehicle travel, ensure that nobody is between the vehicle and the trailer.

3.7 Operation of attachments

3.7.1 Attachments

- Only use attachments that are certified for the vehicle or its protective equipment (for example splinter protection).
- All other attachments require the vehicle manufacturer's release.
- The danger zone and the work area depend on the attachment used.
  - See charger operator's manual.
- Secure the load.
- Do not overload the attachment - observe the permitted vehicle payloads.
- Check the correct position of the lock.

3.7.2 Operating

- Transporting persons on/in an attachment is prohibited.
- Installing a work platform is prohibited.
  - Exception: The vehicle is certified and equipped with the necessary safety equipment.
- Attachments and counterweights modify handling, as well as the steering behavior and brake capability of the vehicle.
- The operator must be familiar with these modifications and act accordingly.
- Before starting work, operate the attachment to check that it works correctly.
- Before putting the attachment into operation, ensure that nobody is at risk
- Lower the attachment to the ground before leaving the seat.

3.7.3 Removing and fitting attachments

- Before coupling or uncoupling hydraulic connections:
  - Stop the engine.
  - Releasing the pressure from the working hydraulics.
- Picking up and lowering attachments to the ground requires special care:
  - Pick up and safely lock the attachment in accordance with the operator's manual,
  - Lower the attachment only to firm, level ground and secure it to prevent it from tipping over or rolling away.
- Put the vehicle and the attachment into operation only if:
  - The protective equipment has been installed and is functional.
  - The connections for the lights and the hydraulic system have been established and are functional.
- Carry out a visual inspection of the locking mechanism. Work must not be carried out before correct locking has been clearly established.
- There must be nobody between the vehicle and the equipment when picking up or lowering an attachment to the ground.

3.8 Towing, recovery, loading and transporting

3.8.1 Towing

- Seal off the danger zone.
- Ensure that no one is near the towing bar or cable. The safety distance is equal to 1.5 times the length of the towing equipment.
- Observe the mandatory transport position, permissible speed and itinerary.
- Do not use the towing bore to tow the vehicle.
- A vehicle of at least the same weight category must be used as the tractor vehicle. Furthermore, the tractor vehicle must be equipped with a safe braking system and sufficient tractive power.
- Only use towing bars or cables approved by a testing or certification body. Adhere to the inspection intervals .
- Do not use any towing bars or cables that are dirty, damaged or not of sufficient size.
- Fasten towing bars or cables only at the defined points.
- Tow away only in accordance with this operator’s manual to avoid damage to the vehicle.
- When towing on public roads or sites, observe the national regulations (e.g. lighting regulations).

3.8.2 Crane-lifting

- Seal off the danger zone.
- The crane and the lifting gear must have suitable dimensions.
- Take into account the vehicle's overall weight.
- Wear protective clothing and equipment when fastening, guiding and removing the vehicle (for example a hard hat, safety glasses, safety boots).
- Use only lifting and fastening gear certified by a test or certification body, observe the inspection intervals.
- Do not use any lifting and fastening gear that is dirty, damaged or not of sufficient size.
- Visually inspect to ensure that all attachment points are not damaged or worn (e.g. no widening, no sharp edges, no cracks).
- Have loads fastened and crane operators only guided by experienced persons.
- The person guiding the crane operator must be within sight or sound of him.
- Observe all movements of the vehicle and lifting gear.
- Secure the vehicle against unintentional movement.
- Raise the vehicle only after it is safely attached and the signalman has given his approval.
- Use only the slinging points provided for fastening the lifting gear (for example cables, belts).
- Do not attach the vehicle by twining the lifting gear (for example cables, belts) around it.
- Ensure an even load distribution when fastening the lifting gear.
- Ensure that no one is in, on or under the vehicle when loading the vehicle.
- Observe the national regulations.
- Load the vehicle only in accordance with this operator's manual to avoid damage to the vehicle.
- Do not raise a vehicle that is stuck or frozen onto the ground, for example.
- Bear in mind the weather conditions (for example the wind force).

3.8.3 Transporting

- For the safe transportation of the vehicle:
  - The transport vehicle must have a sufficient bearing load and loading surface.
  - The maximum weight rating of the transport vehicle must not be exceeded.
- Use only lifting and fastening gear certified by a test or certification body, observe the inspection intervals. Adhere to the inspection intervals .
- Do not use any lifting and fastening gear that is dirty, damaged or not of sufficient size.
- In order to secure the vehicle on the loading surface, use only the fastening points provided for this purpose.
- Ensure that nobody is in or on the vehicle during transporting.
- Observe the national regulations.
- Bear in mind the weather conditions (e.g. ice, snow).
- Ensure the minimum load on the steering axle(s) of the transport vehicle, and ensure an even load distribution.

3.9 Maintenance

3.9.1 Maintenance

- Observe the intervals prescribed by law and those specified in this operator’s manual for routine checks/inspections and maintenance.
- For maintenance activities, ensure that all tools and service center equipment are adapted to the performance of the task described in this operator’s manual.
- Do not use any damaged or malfunctioning tools.
- The vehicle and the engine must be stopped during maintenance.
- Once maintenance is over, correctly install safety equipment again that has been removed.
- Wait for the vehicle to cool down before touching components.

3.9.2 Personal safety measures

- Avoid any operational mode that might pose a risk to safety.
- Wear protective equipment (for example hard hat, protective gloves, safety shoes).
- Tie back long hair and remove all jewelry.
- If maintenance on a running engine cannot be avoided:
  - only work in groups of two.
  - Both persons must be authorized and trained for the operation of the vehicle.
  - One person must be seated on the seat and stay in contact with the second person.
  - Keep a safe distance from rotating parts (e.g. from fan blades, belts).
  - Keep a sufficient distance to hot parts (e.g. exhaust system).
  - Perform maintenance only in well-ventilated rooms or rooms with an exhaust-gas suction system.
- Safely lock or support vehicle components before starting work.
- Take special care when working on the fuel system due to the increased risk of fire.

3.9.3 Preparative measures

- Attach a warning label to the control elements (e.g. “Vehicle being serviced, do not start”).
- Before performing assembly work on the vehicle, support the areas to be serviced and use suitable lifting and supporting equipment for the replacement of parts over 9 kg.
- Perform maintenance only if:
  - the vehicle is positioned on firm and level ground.
  - the vehicle is secured against rolling away (e.g. parking brake, chocks) and the attachment is placed on the ground.
  - The engine is stopped.
  - the starting key has been removed.
  - the pressure in the working hydraulics has been released.
- If maintenance has to be performed under a raised vehicle or attachment, support the vehicle or attachment (e.g. with a lift platform, trestles) to ensure safety and stability.
- Hydraulic cylinders or jacks alone do not sufficiently secure a raised vehicle or attachment.

3.9.4 Measures for performing maintenance

- Perform only the maintenance described in this operator's manual.
- All work that is not described in this operator's manual must be performed by qualified and authorized technically trained personnel.
- Follow the maintenance plan.
- Always use specially designed or otherwise safety-oriented ladders and working platforms to perform overhead maintenance. Do not use vehicle parts or attachments as a climbing aid.
- Do not use attachments as a lift platform for persons.
- Keep climbing aids (handholds and footholds) free from dirt, snow and ice.
- Disconnect the negative terminal of the battery before working on the electrical system.

3.9.5 Modifications and spare parts

- Do not modify the vehicle and the attachment (e.g. the safety devices, lighting, tires, straightening and welding work).
- Modifications must be approved by the manufacturer and performed by an authorized service center.
- Use only original spare parts.

3.9.6 Protective structures

- The cab, roll bar and protective screen are tested protective structures and may not be changed (e.g. no drilling, bending, welding).
- Perform a visual check according to the maintenance plan (for example check fastenings for damage).
- If damage or defects are detected, have them immediately checked and repaired by an authorized service center.
- Only have protective structures retrofitted or replaced by an authorized specialist workshop.
- Replace self-locking fasteners (for example self-locking nuts) by new ones after removing them.

3.10 Measures for avoiding risks

3.10.1 Tires

- Have repair work on the tires only performed by trained technical personnel.
- Check the tires for correct pressure and visible damage (for example cracks, cuts).
- Check the wheel nuts for tightness.
- Use only approved tires.
- The vehicle must have uniform tires (e.g. tire type, profile, rolling circumference).

3.10.2 Hydraulic and compressed-air system

- Check all lines, hoses and screw connections regularly for leaks and visible damage.
- Splashed oil can cause injury and fire.
- Leaking hydraulic and compressed-air lines can cause the full loss of the braking effect.
- Have damage and leaks immediately repaired by an authorized service center.
- Check the hydraulic hoses at the recommended intervals and have them replaced.

3.10.3 Electrical system

- Use only fuses with the specified current rating.
- In case of damage or malfunction in the electrical system:
  - Operate the emergency off switch.
  - Put the vehicle out of operation immediately and secure it against restart.
  - Actuate the battery master switch.
  - Disconnect the battery.
  - Have the fault repaired.
- Ensure that work on the electrical system is only performed by technically trained personnel.
- Regularly check the electrical system. Have malfunctions repaired immediately (for example loose connections, scorched cables).
- The operating voltage of the vehicle, the attachment and the trailer must coincide (e.g. 12 V).

3.10.4 Battery



⚠ WARNING

CALIFORNIA: Proposition 65 (Law of 1986 on toxic substances and safe drinking water) Warning!

Battery terminals, clamps and similar parts contain lead and lead compounds. These chemicals are considered by the State of California to be the cause of cancer and reproductive harm.

► Wash hands after working on the battery.

- Batteries contain caustic substances (for example sulfuric acid). When handling the battery observe the specific safety instructions and regulations relevant to accident prevention.
- A volatile oxyhydrogen mixture forms in batteries during normal operation and especially during charging. Always wear gloves and eye protection when working with batteries.
- Do not perform battery maintenance near open flames.
- Perform battery maintenance only in well-ventilated areas (e.g. due to vapors harmful to health, explosion hazard).
- Starting the vehicle with battery jumper cables is dangerous if performed improperly. Observe the safety instructions regarding the battery.

3.10.5 Safety instructions regarding internal combustion engines



⚠ WARNING

CALIFORNIA: Proposition 65 (Law of 1986 on toxic substances and safe drinking water) Warning!

Engine exhaust, some of its components and certain components contain or release chemicals that are classified by the State of California to cause cancer, birth defects or reproductive harm.

- Internal combustion engines present special hazards during operation and fueling.
- Failure to follow the warnings and safety instructions can cause serious injury or death.
- Keep the area around the exhaust system free of flammable materials.
- Check the engine and fuel system for leaks (e.g. loose fuel lines). Don't start or let the engine run in case of leaks.
- Breathing the exhaust fumes causes death very quickly.
- Engine exhaust fumes contain invisible and odorless gases (e.g. carbon monoxide and carbon dioxide).
  - Operate the vehicle only on appropriately ventilated areas.
- The respective safety instructions must be observed when using the vehicle in areas where there may be explosion hazards.
- Do not touch the engine, exhaust system and cooling system as long as the engine is still running or has not cooled down yet.
- Do not remove the filler cap of the radiator when the engine is running or hot.
- The coolant is hot, under pressure and can cause serious burns.

3.10.6 Bleeding the fuel system and refueling

- Do not bleed the fuel system or refuel near open flames.
- Bleed the fuel system and refuel only in well-ventilated areas (e.g. due to vapors harmful to health, explosion hazard).
- Wipe away fuel spills immediately (e.g. due to fire hazard, slipping hazard).
- Firmly close the fuel tank cap; replace a malfunctioning fuel tank cap.

3.10.7 Handling oil, grease and other substances

- Observe the safety data sheet when handling oils, greases and other chemical substances (e.g. battery acid, coolant, urea solution).
- Wear appropriate protective equipment (e.g. protective gloves, safety glasses).
- Be careful when handling hot vehicle fluids and consumables – there is a risk of burning and scalding.
- Only work with corresponding personal protective equipment, e.g. respiratory protection in exposed areas (e.g. dust, steam, smoke, asbestos).
- Do not operate the vehicle in radioactively, biologically or chemically contaminated areas.

3.10.8 Fire hazard

- Fuel, lubricants, grease and coolants are flammable.
- Do not use flammable detergents.
- Keep the area around the exhaust system free of flammable materials.
- Hot vehicle parts and exhaust gases increase the risk of fire.
  - Stop and park the vehicle only in safe areas.
- If the vehicle is equipped with a fire extinguisher, have it installed in its specific location.
- Keep the vehicle clean. This reduces fire hazards.

3.10.9 Working near electric supply lines

- Before performing any work, the operator must check whether there are any electrical supply lines in the designated work area.
- If there are electrical supply lines, only a vehicle with cab may be used (Faraday cage).
- Keep a safe distance from existing electric supply lines.
- If this is not possible, the operator must initiate other safety measures in agreement with the owner or operating company of the supply lines (e.g. shutdown the power).
- If supply lines are exposed, they must be fastened, supported and secured accordingly.
- If live supply lines are touched nevertheless:
  - do not leave or touch the cab (Faraday cage).
  - If possible, drive the vehicle out of the danger zone.
  - Warn others against approaching and touching the vehicle.
  - Have the live wire de-energized.
  - Do not leave the vehicle until the supply lines that have been touched or damaged have been safely de-energized.

3.10.10 Working near non-electric supply lines

- Before performing any work, the operator must check whether there are any non-electrical supply lines in the designated work area.
- If non-electrical supply lines exist, the operator must initiate safety measures in agreement with the owner or operating company of the supply lines (e.g. shutdown the supply line).
- If supply lines are exposed, they must be fastened, supported and secured accordingly.

3.10.11 Behavior during thunderstorms

- Stop vehicle operation if a thunderstorm is gathering.
  - Stop the vehicle, secure and leave it, and avoid being near it.

3.10.12 Noise

- Observe the noise regulations (for example during applications in enclosed premises).
- Bear in mind external sources of noise (compressed-air hammer, concrete saw).
- Do not remove the sound baffles of the vehicle and attachment.
- Have damaged sound baffles immediately replaced (e.g. an insulating mat, muffler).
- Before starting work with the vehicle or attachment, find out about its noise level (e.g. label) - wear hearing protection.
- Do not wear ear protectors during vehicle travel on public roads or sites.

3.10.13 Cleaning

- Risk of injury from compressed air and high-pressure cleaners.
  - Wear appropriate protective equipment.
- Do not use any dangerous and aggressive detergents.
  - Wear appropriate protective equipment.
- Operate the vehicle only in a clean condition.
  - Keep climbing aids (handholds and footholds) free from dirt, snow and ice.
  - Keep the cab windscreens and visual aids clean.
  - Keep the headlights and work lights clean.
  - Keep the control elements and control lights clean.
  - Keep the safety and information labels clean, and replace damaged and missing labels by new ones.
- Perform cleaning work only if the engine is stopped and cooled down.
- Bear in mind sensitive components and protect them accordingly (e.g. electronic control units, relays).

4 Vehicle Description

4.1 Vehicle view

4.1.1 Vehicle view

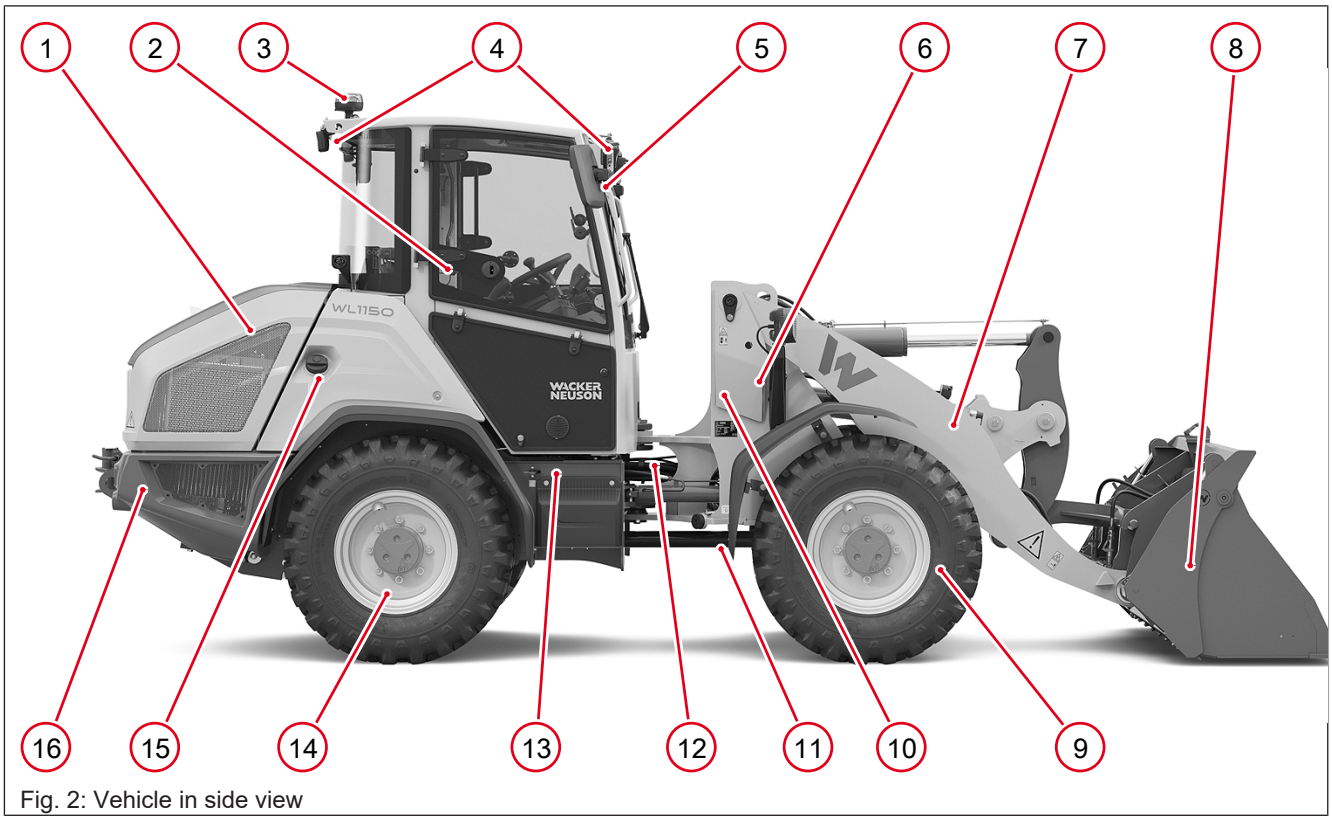

Fig. 2: Vehicle in side view

Item	Designation
1	Engine hood
2	ROPS/FOPS protective structure (overhead guard or cab)
3	Rotating beacon
4	Front and rear work lights
5	Rearview mirror
6	Vehicle chassis front section
7	Loading system
8	Attachment
9	Front wheels
10	Blocking for the articulated pendulum joint (left side)
11	Drive shaft
12	Articulated pendulum joint
13	Vehicle chassis rear section
14	Rear wheels
15	Fill opening for fuel tank
16	Rear weight

4.2 Brief description

4.2.1 Vehicle designations

The vehicle is identified by two designations.

Type designation	Trade name
The type designation is stamped on the type label.	The trade name is affixed to the vehicle
A06-01	WL1150

4.2.2 Main components of the vehicle

Vehicle frame

- Sturdy steel chassis

Engine

For details of the engine: see Engine data on page 230

Driver's platform

- ROPS/FOPS tested cab or overhead guard, according to category on the type plate in the cab or the protective structure.
  - ROPS is the abbreviation of the English term: Roll Over Protective Structure.
  - FOPS is the abbreviation of the English term: Falling Object Protective Structure (protective structure against falling objects)

Traveling drive

- Traveling drive via progressively adjustable hydraulic system
- Maximum speed – depending on vehicle version
  - 30 km/h

Steering system

- Hydrostatic articulated pendulum steering with emergency steering features

Axles

- Rigid front and rear planetary axles

Brake

- Disc brake on front axle
- Multi-disk brake on front axle

Loader unit

- Loader unit
  - with hydraulic lock for attachments

The vehicle is equipped with a Telematic module (EquipCare) for transmitting operating data, location, etc. via satellite. The service partner is available at all times for any questions about the Telematic module.

4.2.3 Installation site for the fire extinguisher

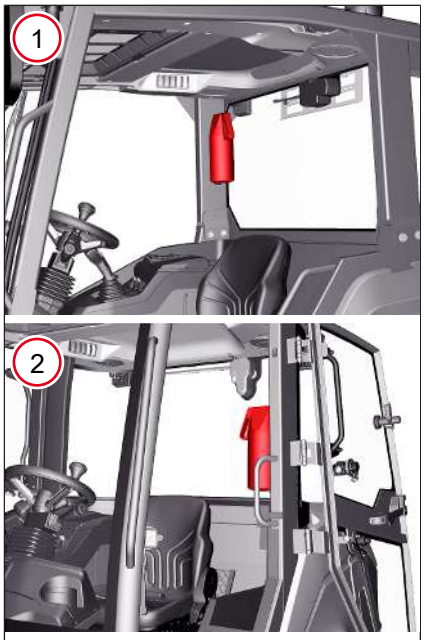

Fig. 3: Installation site for the fire extinguisher

Item	Designation
1	For overhead guard equipment
2	For cab equipment

The fire extinguisher is not included in the vehicle's standard equipment. Only have the fire extinguisher retrofitted by an authorized specialist service center. Operate the fire extinguisher according to the instructions printed on the fire extinguisher.

To maintain the functionality of the fire extinguisher, follow the instructions below:

- Have fire extinguishers checked regularly or refilled. A corresponding test badge is located on the container.
- Only use fire extinguishers in an emergency.
- If the fire extinguisher has been used, have it checked immediately by an authorized service center and refilled. It may be necessary to replace it with a new fire extinguisher.

4.2.4 Overview of options

The vehicle is not equipped with all options described in this operator's manual. The options described in this operator's manual are not available in all countries.

Designation	on page
Seat heating	[▶ 68]
Inside mirror	[▶ 72]
Rear view camera	[▶ 72]
Battery master switch	[▶ 90]
Engine and hydraulic oil preheating	[▶ 90]
Immobilizer with key system	[▶ 93]
Drive interlock EquipCare Dual ID	[▶ 95]
Front axle with multi-disc brake	[▶ 101]
Manual throttle	[▶ 108]
Speed limiter	[▶ 109]
M-Drive driving mode	[▶ 111]
Attachment mode	[▶ 113]
Maneuvering coupling	[▶ 116]
Trailer coupling	[▶ 116]
Rotating beacon orange	[▶ 119]
Window wiper, rear	[▶ 122]
Cab heating	[▶ 122]
Air conditioning system	[▶ 123]
Differential lock	[▶ 127]
Load unit stabilizer	[▶ 129]
Pressure relief 3rd control circuit at the front of the loader unit	[▶ 133]

Designation	on page
3rd control circuit proportional incl. continuous function via switch	[▶ 137]
Rear hydraulic connection single-acting via switchover valve (tipper connection)	[▶ 139]
12 volt 3-pole plug receptacle in cabin	[▶ 142]
Central lubrication system	[▶ 187]
USB socket	[▶ 227]

4.3 Operating elements at the operator station

4.3.1 Overview of the controls

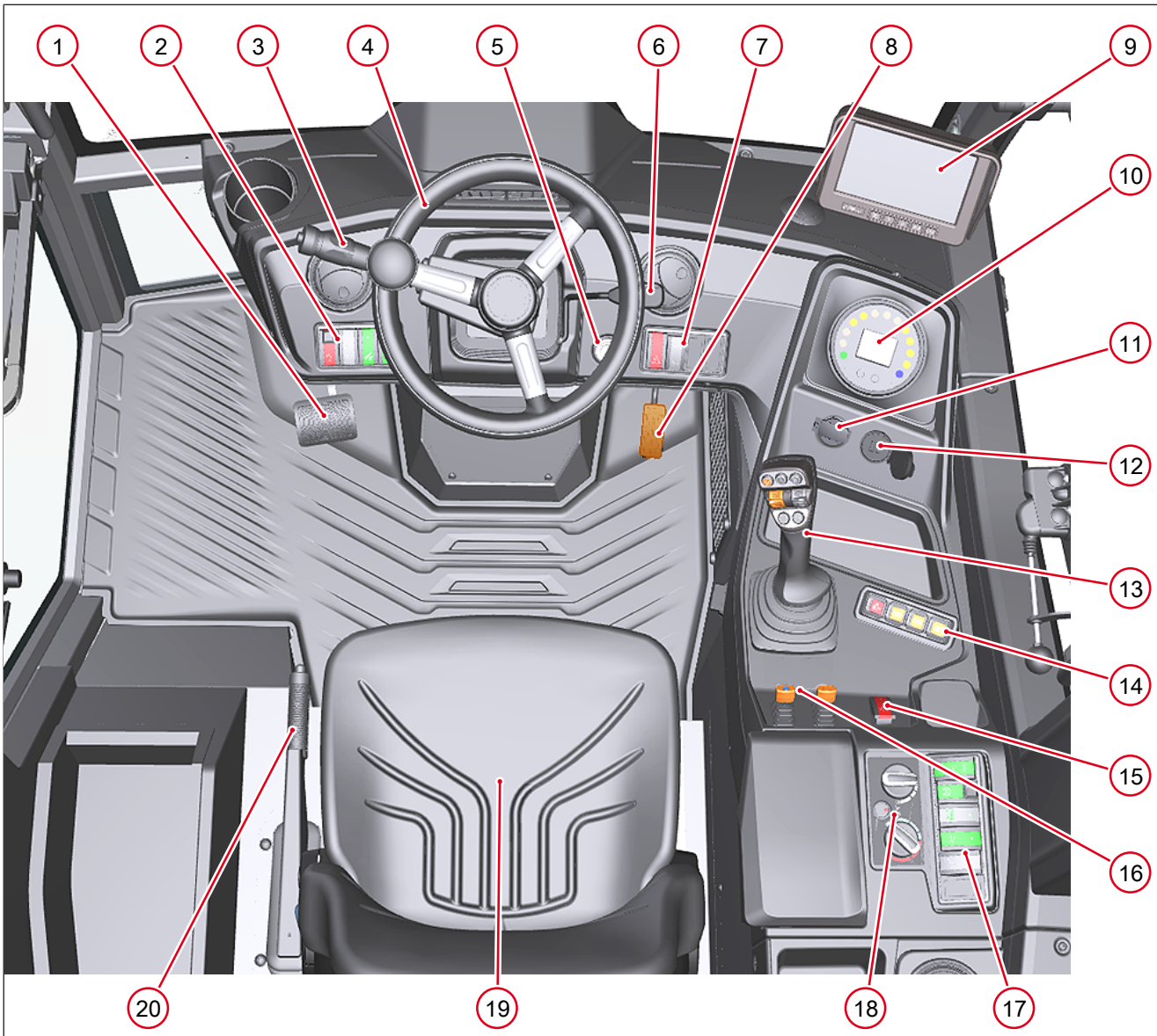

Fig. 4: General overview of the control elements

Item	Designation
1	Brake/inching pedal
2	Switch panel in instrument panel, left
3	Steering column switch

Item	Designation
4	Steering wheel
5	Starter
6	Control lever for steering column adjustment
7	Switch panel in instrument panel, right
8	Accelerator pedal
9	Camera system screen (option)
10	Display
11	12 V socket
12	USB socket (option)
13	Joystick
14	Switch panel Keypads in the side console
15	Switch for parking brake (option)
16	Speed setting control lever (option)/attachment speed control lever (option)
17	Switch panel 4 in the side console
18	Control elements for heating, ventilation and air conditioning system (option)
19	Seat
20	Control lever for the parking brake

4.3.2 Overview of the switches

The table shows all switches available for the vehicle. Depending on the vehicle's equipment, it may not be equipped with all the switches described in this table.

Switch	Function
	**Switch for hydraulic lock** For unlocking the hydraulic lock for attachments. • The switch has a lock. Switch positions: 0 – Neutral 1– Pushbutton function
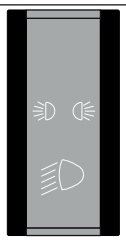	**Light switches** To switch on and off the lighting system. Switch positions: 0 – Neutral 1 – Switch function 2 – Switch function
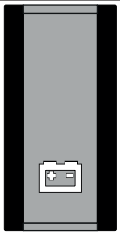	**Switch for battery disconnect relay** For switching the battery cut-off relay on and off. Switch positions: 0 – Neutral 1 - Switch function

Switch	Function
	**Switch for hazard warning system** To activate or deactivate the hazard warning system. Switch positions: 0 – Neutral 1 - Switch function
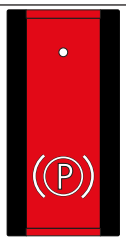	**Switch for parking brake** To switch the parking brake on and off. Switch positions: 0 – Neutral 1 - Pushbutton function
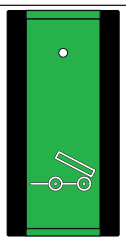	**Switch for activating the hydraulic connections at the rear** To switch the hydraulic function of the standard hydraulic connections to the hydraulic connections at the rear. Switch positions: 0 – Neutral 1 - Switch function
	**Switch for continuous operation of standard hydraulic connections** To switch the operation of the hydraulic connections on and off in continuous operation. Switch positions: 0 – Neutral 1 - Switch function
	**Switch for load unit stabilizer** To enable the use of the load unit stabilizer. Switch positions: 0 – Neutral 1 – Switch function
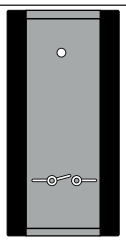	**Switch for electrical plug receptacle 14-pole** To switch the operation of the electrical functions on and off at the 14-pin plug receptacle. Switch positions: 0 – Neutral 1 - Switch function
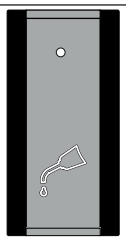	**Switch for central lubrication system** To trigger intermediate lubrication by the central lubrication system. Switch positions: 0 – Neutral 1– Pushbutton function

Switch	Function
	**Switch for locking function of the joystick** To lock the joystick functions against unintentional operation. Switching on and off Switching function
	**Switch for AUTO mode** To select the AUTO driving mode. Switch on Switching function
	**Switch for ECO mode** To select the ECO driving mode. Switch on Switching function
	**Switch for M-Drive mode** To select the M-Drive mode. Switch on Switching function
	**Switch for Attachments mode** For selecting the attachment mode. Switch on Switching function
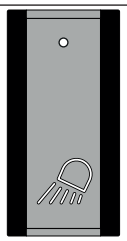	**Switch for work lights** To switch on and off the work lights. Switch positions: 0 – Neutral 1 – Switch function 2 - Switch function
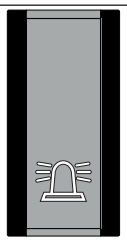	**Switch for rotating beacon** To switch the rotating beacon on and off. Switch positions: 0 – Neutral 1 - Switch function
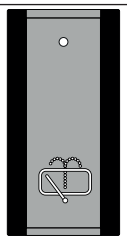	**Switch for the rear window wiper** To switch the rear window wiper on and off. To operate the rear washer system. Switch positions: 0 – Neutral 1 – Switch function 2 - Pushbutton function

4.3.3 Overview of the joystick

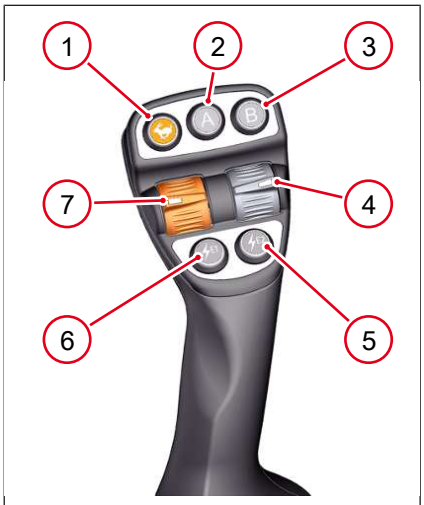

Fig. 5: Switch on joystick top

Item	Designation
1	Switch for high speed/crawler gear button
2	Switch for function A
3	Switch for function B
4	Not assigned
5	Switch for actuating the electrical function of 14-pin plug receptacle
6	Switch for changing the electrical function of 14-pin plug receptacle
7	Switch for forward/reverse driving direction

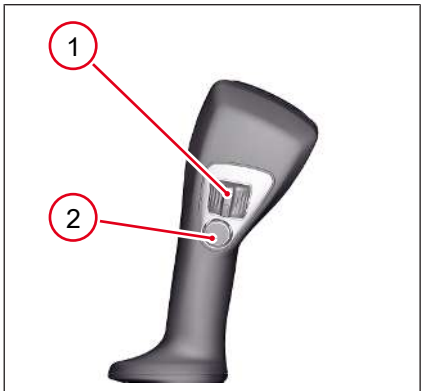

Fig. 6: Switch on joystick bottom

Item	Designation
1	Switch for operating the hydraulic connections
2	Switch for operating the differential lock

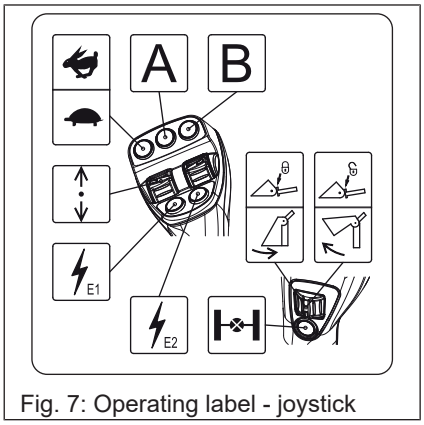

Fig. 7: Operating label - joystick

The label shows the assignment of the joystick. The assignment of the joystick varies depending on the equipment of the vehicle. The label for the joystick also changes according to the equipment.

4.3.4 Overview of the steering column switch

The steering column switch is located on the left of the steering column. The following functions can be operated with the steering column switch:

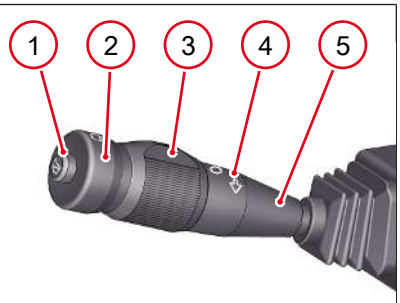

Fig. 8: Steering column switch

Item	Designation
1	Horn by pressing on the switch
2	Washer system of the front window by pressing the switch
3	Window wiper of the front window by turning the switch
4	Turn signal, by pushing lever forward/pulling backward
5	Switching between high beam/low beam by moving the lever up/down

4.3.5 Overview of the control elements heating

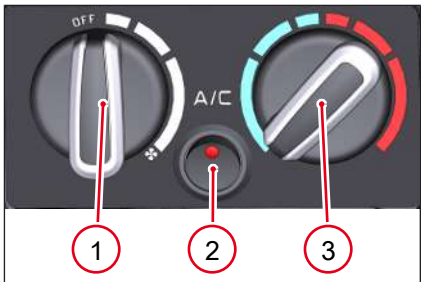

Fig. 9: Control elements heating and air conditioning system

Item	Designation
1	Fan control
2	Switch for air conditioning system
3	Temperature control

4.3.6 Overview over further control elements

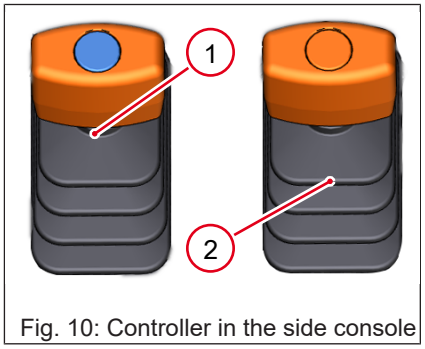

Fig. 10: Controller in the side console

Item	Designation
1	Control lever for speed limiter
2	Control lever for manual throttle

4.4 Type plates and stickers

4.4.1 Nameplate of the vehicle

4.4.1.1 Nameplate location

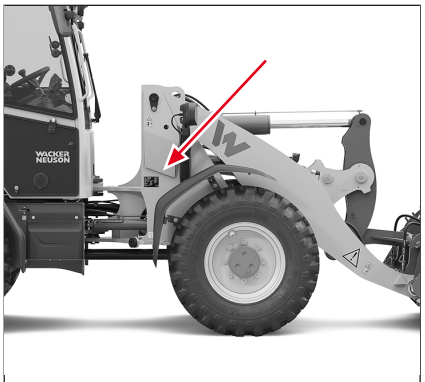

Fig. 11: Position of nameplate on vehicle

A nameplate is permanently affixed to the vehicle.

4.4.1.2 Description of the type label

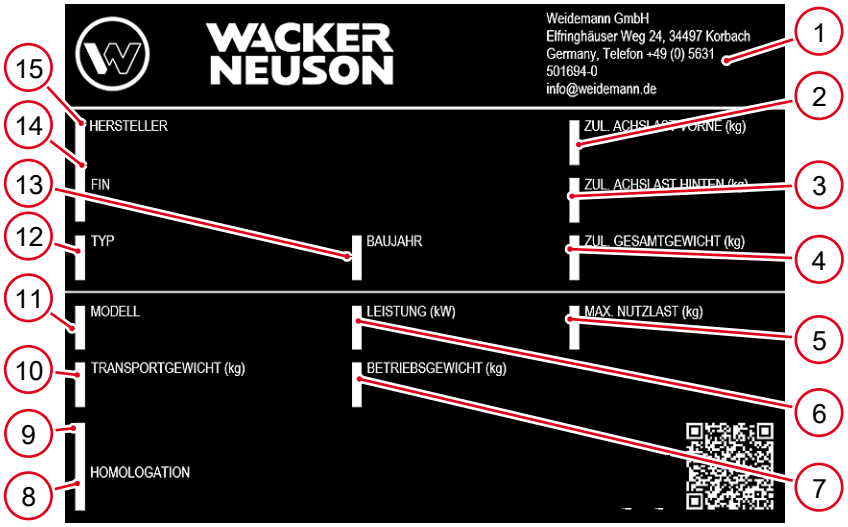

Fig. 12: Type label from 2022

Item	Designation	Page
1	Name and address of manufacturer	--
2	Permissible front axle load in kg	--
3	Permissible rear axle load in kg	--
4	Permissible total weight in kg	--
5	Maximum payload in kg	--
6	Power in kW	--
7	Operating weight in kg	--
8	Homologation number	--
9	Vehicle designation	--
10	Transport weight in kg	--
11	Vehicle model designation	--
12	Vehicle type	--
13	Vehicle year of manufacture	--
14	Vehicle identification number (VIN)	--
15	Manufacturer's name	--

Identification number

The identification number is stamped on the vehicle chassis and the nameplate The indicated identification number is composed as follows:

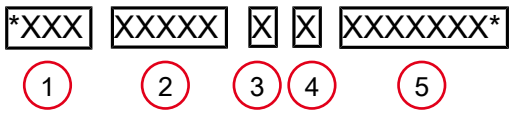

1	*XXX	Manufacturer/works
2	XXXXX	Vehicle model with version
3	X	Standard specific check digit
4	X	Factory coding
5	XXXXXXX*	Sequential number

4.4.2 Other type labels

Other type labels

The following vehicle elements also have their own type label:

- the diesel engine
- the oil pump (hydraulic drive pump)
- the oil motor (hydraulic drive engine)
- the axles
- the ROPS/FOPS protective structure
- the hydraulic accumulators (if any)
- the trailer coupling (if installed)

4.4.3 Overview of the safety label

Solid lines show labels that are affixed outside on the vehicle. Dotted lines show labels that are affixed in the cab or under the engine hood.

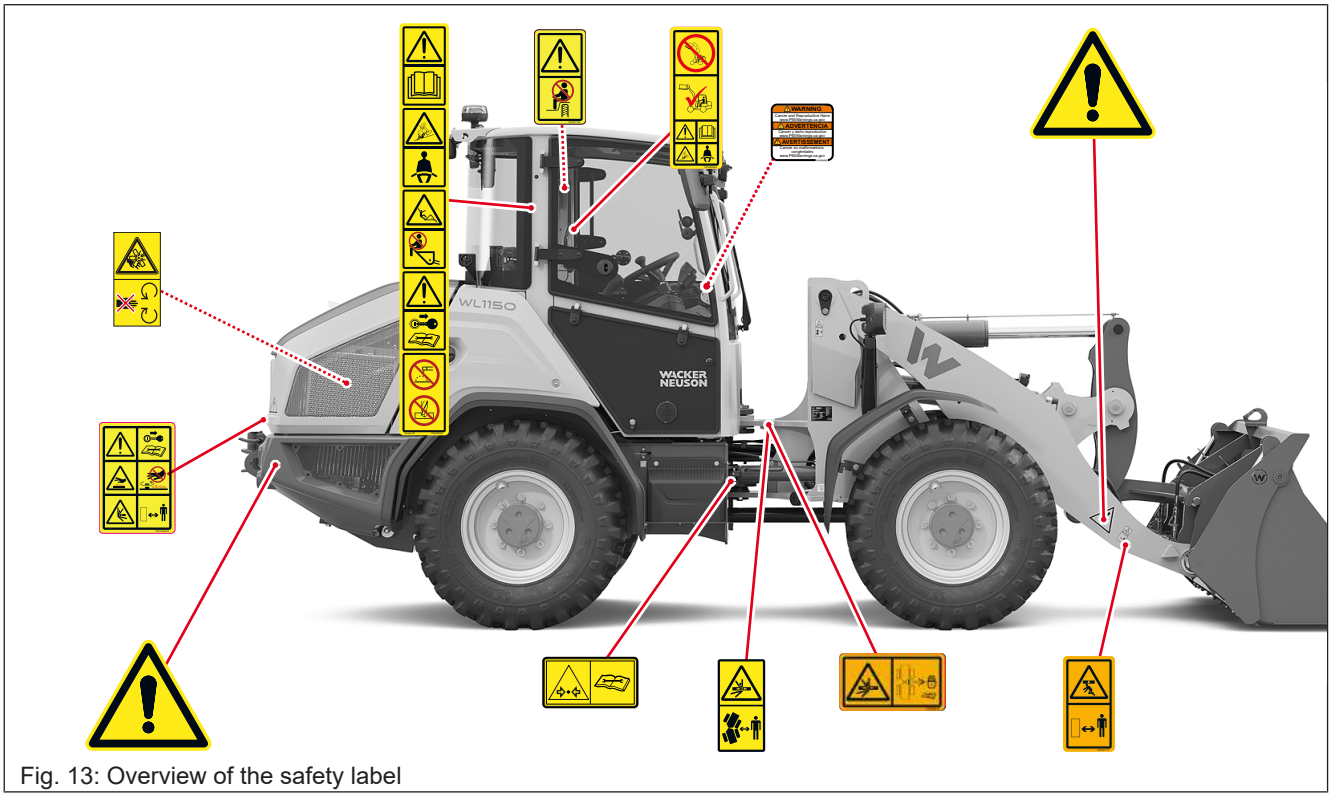

Fig. 13: Overview of the safety label

4.4.4 Overview of the information labels

Solid lines show labels that are affixed outside on the vehicle. Dotted lines show labels that are affixed in the cab or under the engine hood.

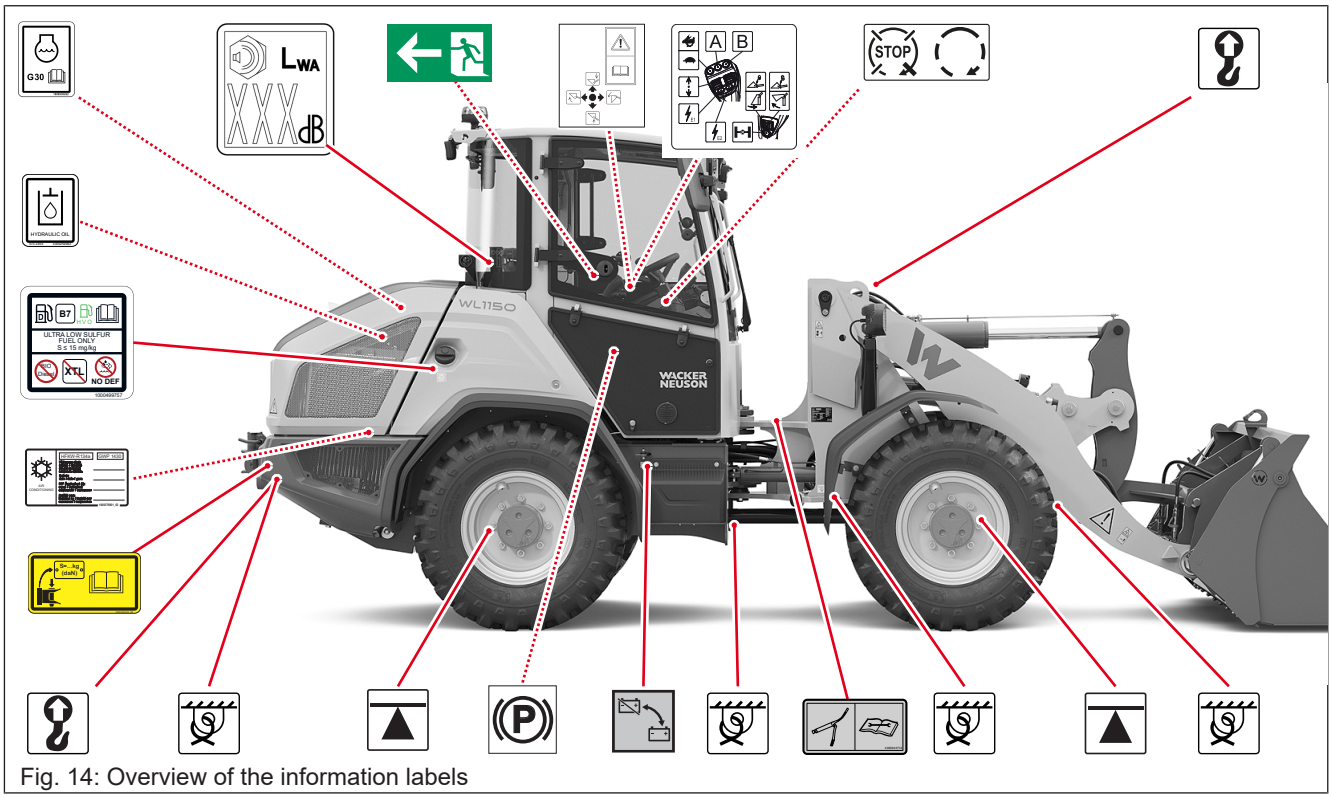

Fig. 14: Overview of the information labels

4.4.5 Description of safety labels



Fig. 15: Warning of health risks safety labels

Warning of health risks

WARNING! CALIFORNIA: Proposition 65 (Toxic Substances and Safe Drinking Water Act of 1986)

Battery poles, battery clamps and similar parts contain lead and lead compounds. These chemicals are classified by the State of California as carcinogenic and harmful to reproductive function. Wash hands after working on the battery.

Engine exhaust, some of its components and certain vehicle components contain or release chemicals that are classified by the State of California to cause cancer, birth defects or reproductive harm.

For more information: www.P65Warnings.ca.gov



Fig. 16: Maintain distance from the load system

Safety label: Maintain a safe distance from the load system

CAUTION! Risk of injury due to lowering of the raised load unit!

- During operation, no persons may be in the vehicle's danger zone.
- Do not step under the raised load system.



Fig. 17: General hazards

Safety label: General risks

CAUTION! Risk of injury in the vehicle's working area

- During operation, no persons may be in the vehicle’s danger zone.



Fig. 18: Label articulation area

Safety label: Standing in the articulation area

CAUTION! Risk of injury in the area of the vehicle’s articulated joint.

- During operation, no persons may be in the vehicle’s danger zone.

Safety label: Block the articulated joint!

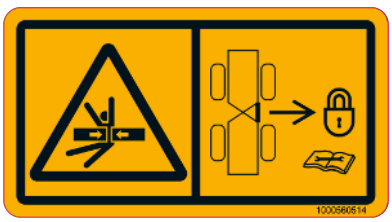

Fig. 19: Label - Block the articulated joint

CAUTION! Risk of injury in the area of the vehicle’s articulated joint.

- Block the articulated joint prior to working in the area of the articulated joint.
- Block the articulated joint when transporting the vehicle.



Fig. 20: Safety label Rotating parts

Safety label: Rotating parts

CAUTION! Risk of injury - Shear hazard due to rotating parts!

- Do not touch any moving or turning parts.
- Perform inspections and maintenance work only when the engine is at a standstill.



Fig. 21: Label Accompanying persons

Safety label: Do not allow any persons to ride along

CAUTION! Risk of injury, additional persons riding on the vehicle can fall off and get injured.

- Never transport persons with the vehicle.



Fig. 22: Safety instructions on the engine hood

Safety label: Safety instructions on the engine hood

WARNING! Various dangers and prohibitions

- The label warns of various dangers and indicates prohibitions.

Explanation of the symbols on the label:

Item	Meaning
	Attention! Comply with the instructions on the label.
	Remove ignition key before performing vehicle inspections and maintenance. Observe the operator's manual before maintenance work.
	Allow the hot vehicle parts to cool down. Wear protective clothing during maintenance work.
	Open the filler cap of the cooling system only after the coolant has cooled down.
	During operation, no persons may be in the vehicle's danger zone.
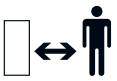	



Fig. 23: Safety instructions

Safety label: Adhere to safety instructions

WARNING! Various dangers and prohibitions

- The label warns of various dangers and indicates prohibitions.

Explanation of the symbols on the label:

Item	Meaning
	Attention! Comply with the instructions on the label.
	Read the operator’s manual prior to startup!
	Operate the vehicle only from the operator seat. Observe the vehicle's stability and tipping resistance.
	Fasten seat belt before operating the vehicle.
	Do not lift people with the load system.
	Do not transport people with the load system.
	Remove ignition key before performing vehicle inspections and maintenance. Observe the operator's manual before maintenance work.
	Never weld on ROPS/FOPS protective structures.
	Never drill on ROPS/FOPS protective structures.



Fig. 24: Falling objects label

Safety label: Falling objects

CAUTION! Never transport several large bales or crates at the same time!

- Do NOT load large bales or general cargo with vehicles without a driver's protective roof or cab!
- Read the operator’s manual before putting into operation!
- Wear seat belt when operating the vehicle!

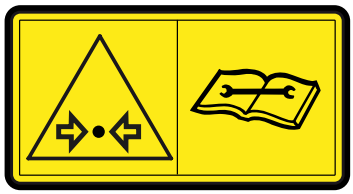

Fig. 25: Label - Pressure storage

Do not open the pressure storage!

CAUTION! Risk of injury due to sudden lack of pressure.

Bin is under pressure.

- Work on the pressure storage and the lines connected to it may only be carried out by technically trained personnel.

4.4.6 Description of information labels

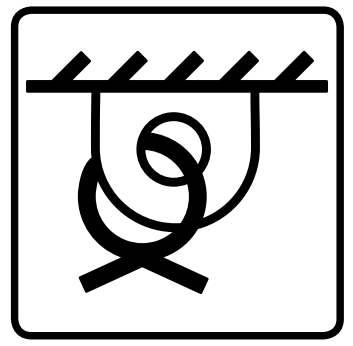

Fig. 26: Tie-down points label

Tie-down points

The label identifies the tie-down points on the vehicle.

Lashing gear can be attached to the tie-down points to secure the vehicle for transport.

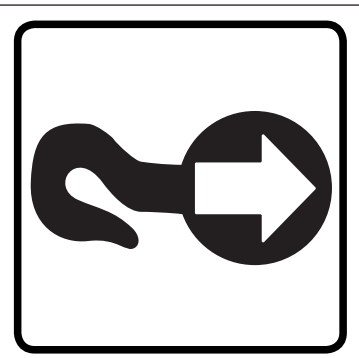

Fig. 27: Towing points labels

Towing points

The labels mark the towing points, on which a tow rope can be mounted when the vehicle has to be secured.

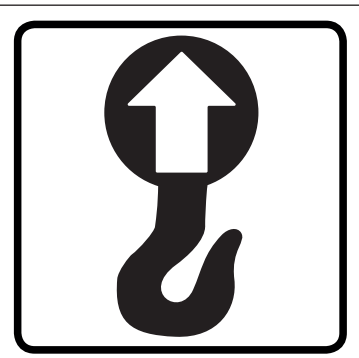

Fig. 28: Attachment points label

Attachment points

The labels are used to identify the attachment points that must be used to hook a loading harness for crane lifting.

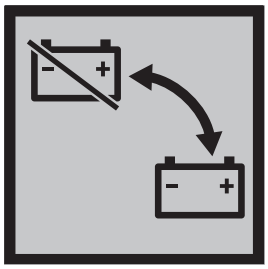

Fig. 29: Battery master switch label

Battery master switch

The vehicle is equipped with a battery master switch. The battery master switch can be used to disconnect the battery supply to the vehicle electrical system. This adhesive label identifies the battery master switch position.

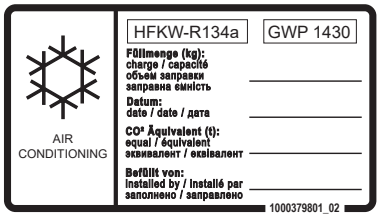

Fig. 30: Coolant of the air conditioning system label

Coolant of the air conditioning system

There is coolant in the air conditioning system. The label contains information about the coolant used in the air conditioning system. The label is located near the condenser.

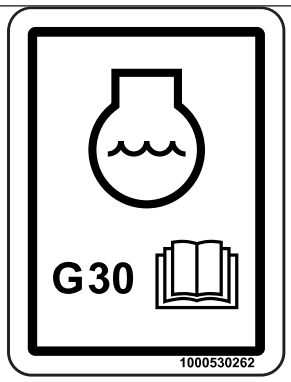

Fig. 31: Coolant label

Coolant specifications

The label indicates coolant specifications. Additional information: Vehicle fluids.

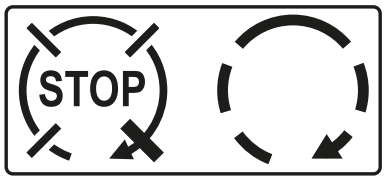

Fig. 32: Engine stop label

Switch off the engine

The adhesive label indicates the position of the starting key in which the engine is started and stopped.

The engine is started by turning the starting key to the right. The running engine is stopped by turning the starting key to the left.

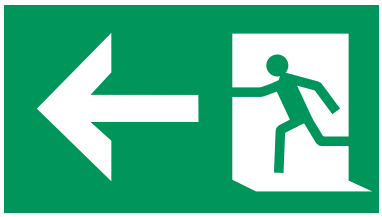

Fig. 33: Emergency exit label

Emergency exit

The adhesive label identifies the emergency exit.



Fig. 34: Label: Parking brake

Parking brake

The label identifies the position of the parking brake lever.

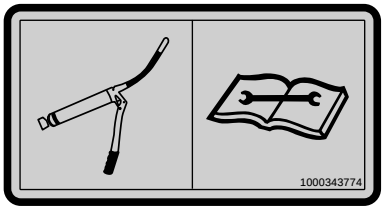

Fig. 35: Label: Lubricate lubricating points

Observe lubrication plan

The label indicates that all lubrication points must be lubricated regularly according to the lubrication plan in the operator's manual.

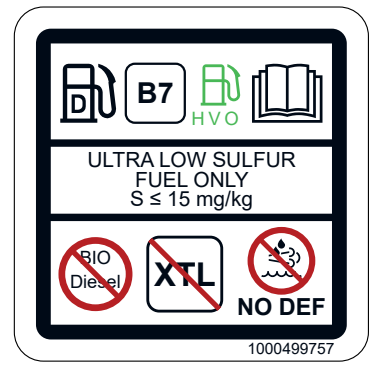

Fig. 36: Permissible fuels label

Permissible fuels

The vehicle can be operated with the following fuels:

- Diesel fuels with a sulfur content ≤ 15 mg/kg.
- Diesel fuels with a biodiesel content of up to seven percent by volume
- Hydrotreated Vegetable Oil – Fuels made from hydrogenated vegetable oil

It is not allowed to fill the tank with the following:

- Pure biodiesel
- XTL fuels – Synthetic fuels
- Diesel-Exhaust-Fluid – Fluid for exhaust gas aftertreatment

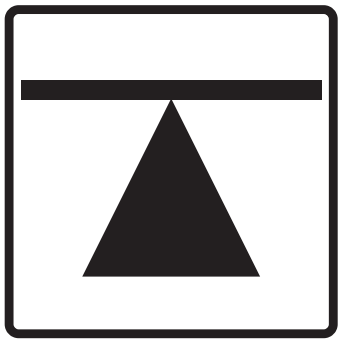

Fig. 37: Jack position label

Jack position

The label indicates the points on the vehicle where the jack must be positioned when a wheel is to be lifted.

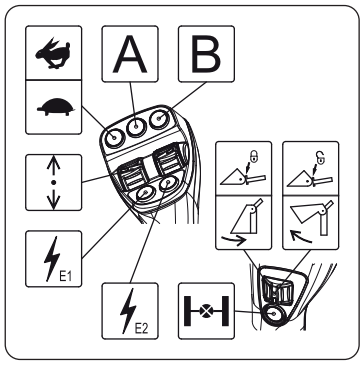

Fig. 38: Joystick allocation label

Joystick functions

The label shows the functions of the joystick. The label can be shown differently depending on the options selected. Other chapters describe the functions.

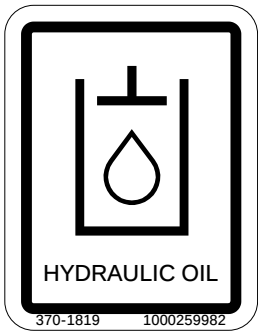

Fig. 39: Hydraulic oil label

Add hydraulic oil

The label points out the filler neck of the hydraulic oil tank.

Only add hydraulic oil to the hydraulic oil tank.



Fig. 40: Biodegradable hydraulic oil label

Do not mix hydraulic oils

The label is located near the hydraulic oil filler hole.

The label indicates that the vehicle's hydraulic system is filled with biodegradable hydraulic oil. Biodegradable hydraulic oil must not be mixed with other oil. Mixing leads to malfunctions and damage to the hydraulic system. Only fill the hydraulic oil tank with the oil specified on the label.

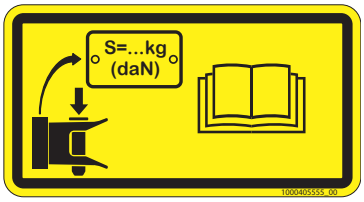

Fig. 41: Label of trailer hitch drawbar load

Drawbar load on trailer hitch

The label indicates that the maximum trailer load and support load of the trailer coupling should not be exceeded, see Trailer loads and drawbar loads on page 233.

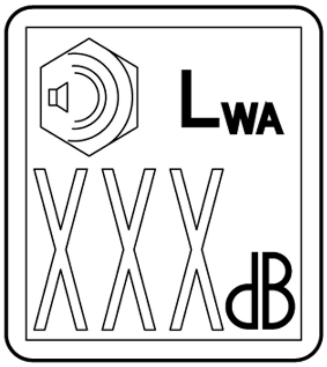

Fig. 42: Label noise parameters

Maximum sound power level

The adhesive label identifies the maximum sound power level of the vehicle. The value indicated on the adhesive label is not exceeded during vehicle operation.

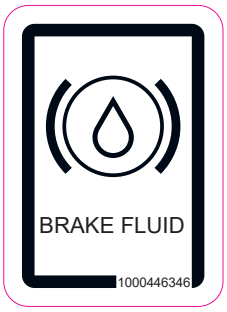

Fig. 43: Label for brake oil reservoir

Filler opening for brake oil

The label marks the point where the storage reservoir of brake oil is located. A cover must be removed as required to be able to reach the storage reservoir.

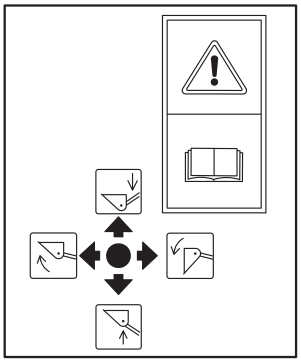

Fig. 44: Operate the loading system

Operating the load system with a joystick

Lever to the front – Load system is lowered.

Lever to the rear – Load system is lifted.

Lever to the left – Attachment rolls in.

Lever to the right – Attachment rolls out.

Observe the operator’s manual.

5 Putting into operation

5.1 Boarding and disembarking

5.1.1 Entering the vehicle



⚠ CAUTION

Risk of falling when entering or exiting!

Entering or exiting incorrectly can cause injuries.

- ► Keep the mandatory climbing aids clean.
- ► Use prescribed climbing aids for entering and exiting.
- ► Face the vehicle as you enter and leave it.
- ► Have damaged climbing aids replaced.



NOTICE

Damage to the steering column due to entering and exiting!

Holding onto the steering wheel when getting on and off the vehicle can cause damage to the steering column.

- ► Only use the climbing aids.
- ► The steering wheel and steering column are not suitable climbing aids.

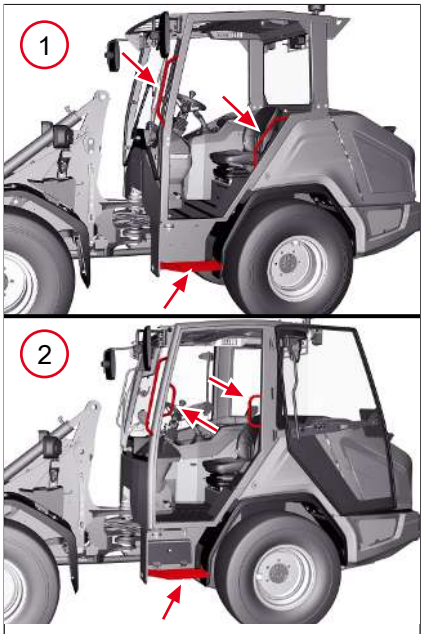

Fig. 45: Entering the vehicle

Item	Designation
1	Overhead guard equipment
2	Cabin equipment

Locks are located on the following components of the vehicle:

- Cab door
- Starter
- Engine hood
- The maintenance flap on the cab
- Toolbox, if available

The vehicle is equipped with a door on the left.

Climbing aids are attached to the vehicle. The climbing aids are firmly connected to the vehicle. Before leaving the vehicle, check that the doors and windows of the cab are closed.

5.1.1.1 Open the doors



⚠ CAUTION

Crushing hazard due to unlocked doors!

Crushing can be caused by the doors slamming shut.

► Always lock doors.

► Use provided handles for closing.

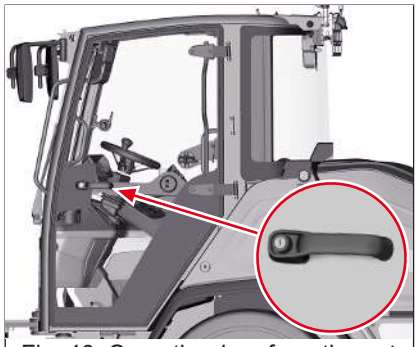

Fig. 46: Open the door from the outside

Open the door from the outside

1. Unlock the lock with the starting key.
2. Press the button and pull the door handle.

⇨ Open the door.

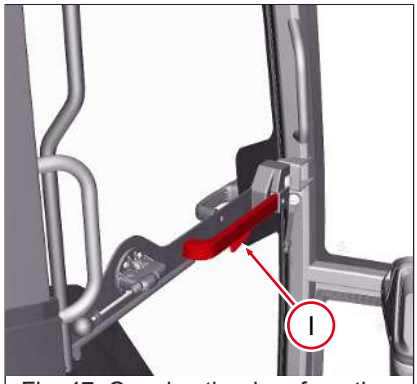

Fig. 47: Opening the door from the inside

Opening the door from the inside

▪ Press lever **I**.

⇨ Open the door.

5.1.1.2 Closing the doors

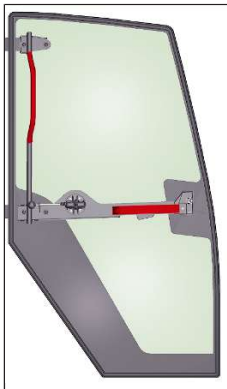

Fig. 48: Close the door from the inside

Close the door from the inside

There is a bracket on the inside of the door. This allows the cab door to be closed from the inside.

1. Pull the bracket inwards when the door is open.
2. Door locks into the door lock.

⇨ Door is closed.

Close door from outside

To prevent third parties from using the vehicle, always lock the door after getting out and lock them with the starting key.

1. Push the door against the spring.
2. Door locks into the door lock.
   ⇨ Door is closed.
3. Lock the door with the starting key.

5.1.1.3 Locking doors into place and opening doors

Locking the doors into place

NOTICE

Damage to the side window

If the left-hand side window is in the raised position, it can be damaged when the door is locked in the open position.

► Close the side window completely before locking the door in the open position.



Fig. 49: Locking door into place

1. Open the door.
2. Fold the door back.
3. Lock the door by snapping it into place.

⇨ Door is locked into place.

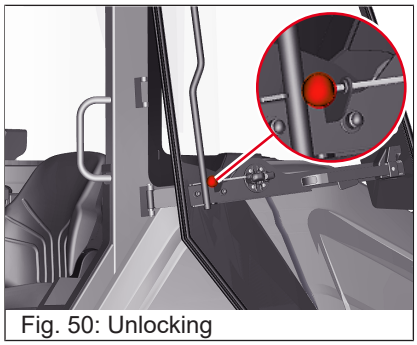

Fig. 50: Unlocking

Release door lock

1. Pull the unlocking lever.
   ⇨ Locking is released.
2. Fold the door forward.
3. Engage the door in the door lock.

⇨ Door is closed.

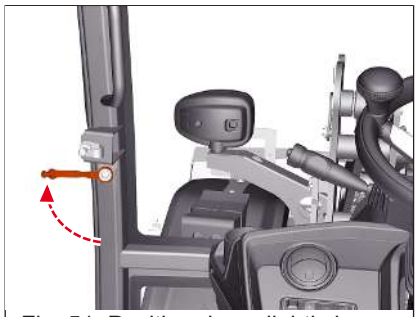

Fig. 51: Position door slightly in open position

Positioning door

The doors can be opened to a gap.

1. Fold down the lever.
2. Engage the lever in the lock and lock into place.

⇨ Door is locked open into place.

5.1.1.4 Opening and closing the side window



⚠ CAUTION

Crushing hazard due to unlocked windows!

The windows can cause crushing when closing.

► Always lock the windows.

► Use provided handles for closing.

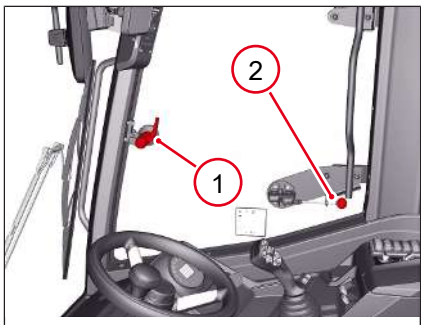

Fig. 52: Opening and locking the side window

1. Actuate lever **1**.
   ⇨ Side window is open.
2. Press the side window against the locking mechanism.
3. Lock the side window by pressing lever **2**.

⇨ Side window is locked.

1. Actuate lever **2**.
   ⇨ The locking mechanism of the side window is released.
2. Closing the side window with lever **1**.
3. Lock the side window.

⇨ Side window is closed.

Opening the side window to a gap



NOTICE

Damage to the side window

If the left-hand side window is in the raised position, it can be damaged when the door is locked in the open position.

► Close the side window completely before locking the door in the open position.

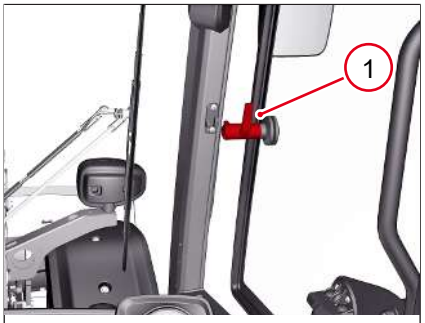

Fig. 53: Opening the side window to a gap

The side windows can be opened to a gap. To do so. let lever **1** lock into place. Before leaving the vehicle, check that the doors, side windows and rear window are closed.

5.1.2 Emergency exit

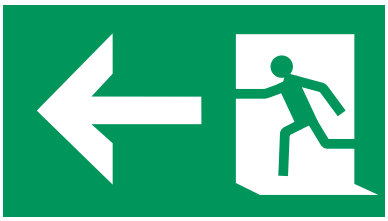

Fig. 54: Emergency exit identification

The right-hand side window is provided as an emergency exit if the door is blocked.

The emergency exit can be identified with the label shown.

In an emergency, climb out of the vehicle:

- Remove the starting key.
- If possible, request outside assistance.
- Open the emergency exit.
- Leave the vehicle through the emergency exit.

5.1.2.1 Use the glass breaker to make an emergency exit



⚠ CAUTION

When breaking a window, there is a risk of injury due to broken glass!

Breaking a window results in small pieces of glass that can cause cuts to one's face and limbs.

► Protect your face before breaking the glass.

► If possible, call for help from someone outside of cab before breaking the window.



Fig. 55: Position of emergency hammer

The cab can be optionally equipped with an emergency hammer.

In case of an emergency in which the door of the cabin is blocked, create an exit opening by using the emergency hammer to smash one of the cabin windows.

Use the emergency hammer only in an emergency:

1. Remove the emergency hammer from the holder.
2. Smash the window.
   ⇨ Emergency exit is open.
3. Leave the vehicle through the emergency exit.

5.2 Setting up the operator station

5.2.1 Adjusting the seat



⚠ WARNING

Risk of accident when adjusting the seat during operation!

Adjusting the seat during operation may result in an accident, serious injury or death.

► Adjust the seat before commissioning the vehicle.

► Ensure that the levers for seat adjustment are locked into place.

The seat is of essential importance for reducing the vibrations transferred to the operator.

Always adjust the seat to individual needs, e.g. height and posture. These settings prevent tension and fatigue when working.

Adjust the seat so that all control levers, pedals and switches are easily accessible while the back is resting against the backrest.

5.2.1.1 Seat Activo Plus MOL698

Overview seat position



Fig. 56: Overview seat position

Item	Designation
1	Rücklehneneinstellung
2	Federungseinstellung
3	Sichtfenster zur Gewichtseinstellung
4	Gewichtseinstellung
5	Längsverstellung

Sit on the seat to adjust.

Adjust the backrest

1. Pull lever **1** upward and hold.
2. Move the backrest forwards or backwards until the backrest is at the desired angle.
3. Release lever **1**.

After adjustment, lever **1** must engage in the desired position. Once it is locked in place the backrest must no longer move.

Adjusting the damping hardness of the suspension

The damping hardness of the seat suspension can be adjusted using rotary handle 2.

- Turn rotary handle **2** clockwise.

⇨ Spring tension is increased- suspension becomes harder.

- Turn rotary handle **2** counterclockwise.

⇨ Spring tension is reduced - suspension becomes softer.

Set weight

The seat can be adjusted to the weight of the operator. Rotary handle **4** aids in setting. You can simultaneously read the currently set weight in the sight glass **3**.

- Turn rotary handle **4** clockwise.

⇨ The weight displayed in viewing window **3** increases.

- Turn rotary handle **4** counterclockwise.

⇨ The weight displayed in viewing window **3** decreases.

The suspension is correctly adjusted when the weight displayed in viewing window **3** matches the operator's weight.

Adjusting the longitudinal direction

1. Pull lever **5** upward and hold.
2. Push the seat forwards or backwards into the desired position.
3. Release lever **5**.

After adjustment, lever **5** must engage in the desired position. It shall not be possible to move the seat after it has been locked.

5.2.1.2 Seat MSG85/721



Fig. 57: Setting options for seat MSG85/721

Sit on the seat to adjust.

Adjusting the backrest

1. Pull lever **1** upward and hold.
2. Move the backrest forwards or backwards until the backrest is at the desired angle.
3. Release lever **1**.

After adjustment, lever **1** must engage in the desired position. Once it is locked in place the backrest must no longer move.

Adjusting the suspension

The suspension travel of the seat can be adjusted using rotary handle **2**.

The currently set operator weight in kg can be read off in the sight glass **2a**.

- Turn rotary handle **2** clockwise.

⇨ Spring tension is increased- suspension becomes harder.

⇨ The weight displayed in the sight glass increases.

- Turn rotary handle **2** counterclockwise.

⇨ Spring tension is reduced - suspension becomes softer.

⇨ The weight displayed in the sight glass decreases.

The suspension is correctly adjusted when the weight displayed in sight glass **2a** matches the operator weight.

Adjusting longitudinal direction

1. Pull lever **3**upward and hold.
2. Push the seat forwards or backwards into the desired position.
3. Release lever **3**.

After adjustment, lever **3** must engage in the desired position. It shall not be possible to move the seat after it has been locked.

5.2.1.3 Seat MSG95



Fig. 58: Seat adjustment options MSG 95

Sit on the seat to adjust.

Adjusting longitudinal direction

1. Pull lever **1** upward and hold.
2. Push the seat forwards or backwards into the desired position.
3. Release lever **1**.

After adjustment, lever **1** must engage in the desired position. It shall not be possible to move the seat after it has been locked.

Adjusting suspension and height

The seat MSG95 is air suspended. The suspension and height of the seat can be continuously adjusted with lever **3** via a compressor. The reaching of the lower and upper end stops of the suspension is indicated when the sound of the compressor changes audibly.

The suspension is correctly adjustment when the yellow indicator in the sight glass **2** turns black.



NOTICE

Damage to the compressor.

Too long operation of the suspension adjustment can cause damage to the compressor.

► Do not operate the suspension adjustment for more than one minute.

The individually desired height can be adjusted up to a minimum spring travel.

✓ The ignition must be switched on.

1. Pull lever **3** upward.
   ⇨ The seat moves upwards and the suspension travel increases.
2. Push lever **3** downwards.
   ⇨ The seat moves downwards, the suspension travel becomes smaller.
3. Release lever **3** when the seat has reached the desired position.

⇨ Suspension and height are adjusted.

Adjusting the backrest

1. Pull lever **4** upward and hold.
2. Move the backrest forwards or backwards until the backrest is at the desired angle.
3. Release lever **4**.

After adjustment, lever **4** must engage in the desired position. Once it is locked in place the backrest must no longer move.

5.2.1.4 Seat heating

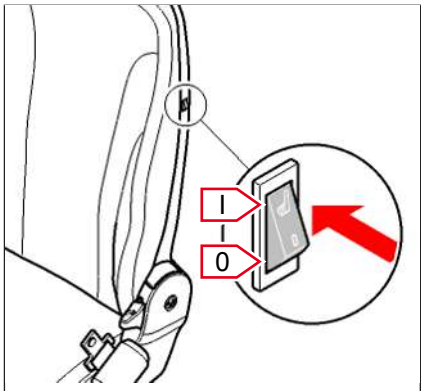

Fig. 59: Switch for seat heating

The seat heating is operated with the pushbutton on the left side of the backrest.

- Move rocker switch to position **I**.

⇨ The seat heating is switched on.

- Set switch in position **0**.

⇨ The seat heating is switched off.

5.2.2 Fastening the seat belt



⚠ WARNING

Injury hazard if the seat belt is not fastened correctly or not at all!

Fastening the seat belt incorrectly, or not at all, can cause serious injury or death.

- ► Fasten the seat belt before operation.
- ► Do not fasten a twisted seat belt.
- ► Do not place the seat belt over hard, edged or fragile items in your clothes.
- ► Firmly fasten your seat belt over your hips.



⚠ WARNING

Risk of injury due to damaged or contaminated seat belt

A damaged or dirty seat belt can cause serious injury or death.

- ► Keep the seat belt and buckle clean.
- ► Check the seat belt and buckle for damage.
- ► Have a damaged seat belt and buckle immediately replaced by an authorized service center.
- ► Have the seat belt replaced by an authorized service center after an accident, even if there is no visible damage. Have the seat fastening and anchoring points checked for further load-bearing capacity.



⚠ WARNING

Risk of accident from adjusting the seat belt while driving!

The operator is distracted by adjusting the seat belt while driving. This can cause accidents with serious injuries or death.

- ► Adjust the seat belt before commissioning the vehicle.
- ► Check by tensile test that the belt buckle is engaged.

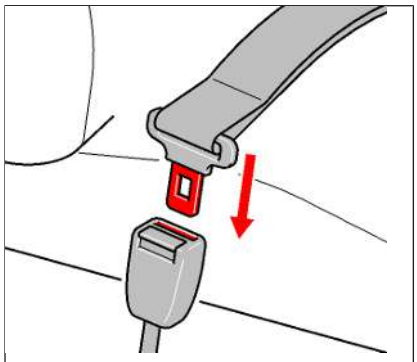

Fig. 60: Fastening the seat belt

Fastening the seat belt

1. Sit down on the operator seat.
2. Guide the seat belt over the pelvis to the buckle.
   ⇨ The belt must not be twisted.
3. Insert the buckle latch into the belt buckle until it audibly engages.
   ⇨ Check correct locking with tension test.
4. Pull the end of the belt to tighten the seat belt.

⇨ Seat belt is fastened.

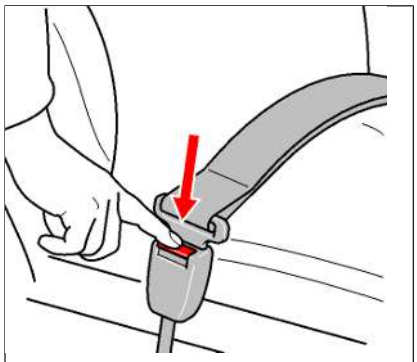

Fig. 61: Releasing the seat belt

Releasing the seat belt

1. Hold the seat belt.
2. Press the button on the buckle.
   ⇨ The buckle latch is released from the buckle.
3. Slowly return the seat belt to the retractor.

5

Information

Seat belt with the ELR system

An orange safety belt is equipped with an ELR system (Emergency Locking Retractor). The ELR system blocks the belt from a specific inclination and/or acceleration. The driver has more freedom of movement than with a conventional seat belt.

If the seat belt cannot be unrolled to fasten, the vehicle cab be tilted too much. In such a case, drive the vehicle carefully on an even terrain and fasten the belt.

5.2.3 Adjusting the steering wheel

⚠ WARNING

Danger of accident when adjusting the steering wheel during operation!

Adjusting the steering wheel during operation may result in an accident, serious injury or death.

- ► Adjust the steering wheel before commissioning the vehicle.
- ► Make sure that the lever for adjusting the steering wheel is engaged.

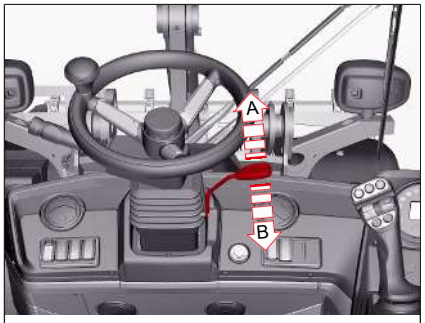

Fig. 62: Lever for adjusting steering wheel

The height and inclination of the steering column can be individually adjusted according to body size.

Adjusting height of steering wheel

1. Pull lever **1** upward (**A**) and hold.
   ⇨ The steering wheel is unlocked.
2. Pull or push the steering wheel to the desired height.
3. Release lever **1**.

⇨ Steering wheel is locked - the height of steering wheel is set.

Adjusting tilt of steering wheel

1. Push lever **1** downward (**B**) and hold.
   ⇨ The steering wheel is unlocked.
2. Pull or push the steering wheel to the desired angle.
3. Release lever **1**.

⇨ Steering wheel locked - the inclination of steering wheel is set.

5.2.4 Restrictions of the field of vision



⚠ WARNING

Accident hazard due to persons in the risk zone!

Persons who are in the risk zone of the vehicle or suddenly enter it can be injured by working movement or the moving vehicle. This may result in accidents that could result in serious injury or death.

► Interrupt work immediately if persons enter the risk zone.
► Adjust the mirror correctly. Use visual aids such as, e.g. a camera.
► Observe extreme caution when reversing.

The field of vision is the area that the operator can see from the seat. The field of vision can be expanded with the help of vison aids such as mirrors or camera systems.

5.2.4.1 Restrictions of the field of vision in the work operation

Hazards due to restrictions of the field of vision may arise during work operation with the loader unit raised and when in reverse. Additional field of view restrictions can be caused by vehicle components, protective screen, attachments and loads on the pallet fork.

The field of vision is determined under the following conditions:

- Attachment in transport position.
- Visibility is measured at ground level in a radius of 12 m.
- Visibility is measured at a height of 1.2 m at a distance of one meter.

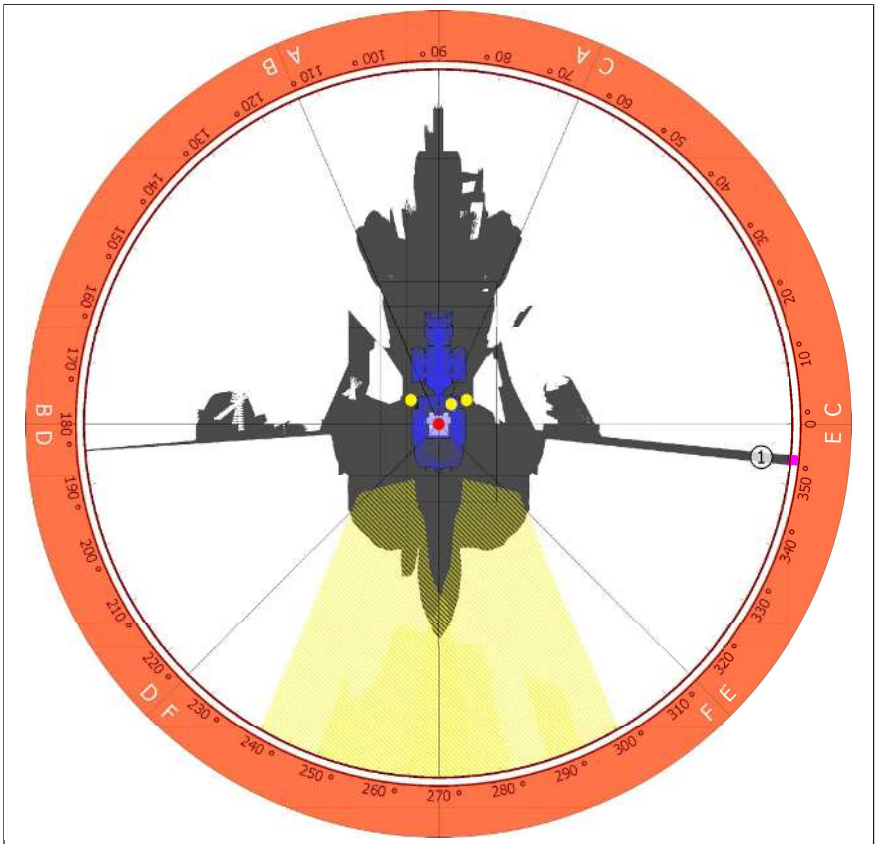

Fig. 63: Field of vision of the vehicle in work operation

Test circuit

The test circuit descries a circuit of 12-m radius around the vehicle.

Limited field of vision

The gray areas indicate the areas in which visibility may be restricted, e.g. due to paneling parts of the vehicle. These areas can arise between the vehicle and the 12 m test circuit.

Mirror field of vision

The mirror field of vision describes the areas that are visible using the mirror mounted on the vehicle.

Head position of the operator

The red circle marks the head position of the operator when he/she sits on the seat.

Field of view restrictions on the test circuit

The marked area shows the limited field of vision in the 12 m test circuit on one hand and in the 1 m area around the vehicle on the other.

Mirrors

Yellow circles describe the positions of mirrors mounted on the vehicle.

5.2.5 Adjusting the mirrors



⚠ WARNING

Risk of accident from adjusting the seat belt while driving!

The operator is distracted by adjusting the seat belt while driving. This can cause accidents with serious injuries or death.

- ► Do not adjust the mirror while driving.
- ► Adjust the mirror before commissioning the vehicle.

The field of vision is the area that the operator can see from the seat. The field of vision can be expanded with the help of vision aids such as mirrors or camera systems.

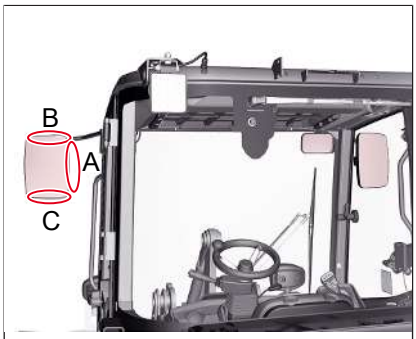

Fig. 64: Adjusting the mirror on the vehicle

Adjusting the rear view mirrors

1. Adjust the rear view mirrors as shown.
2. Turn the mirror holder to the front until the mirror cannot collide with the door (approx. 90 °).
3. Adjust the rear view mirrors.
   - ⇨ The outer edge of the vehicle is visible on the inside edge **A**.
   - ⇨ The horizon is visible on the upper edge **B**.
   - ⇨ The visible area reaches as close as possible to the vehicle at lower edge **C**.

⇨ The rear view mirror is suitably adjusted.

Adjust other rear view mirrors in the same manner.

Adjusting the inside mirror

Adjust the inner mirror such that the area directly behind the vehicle can be seen.

5.2.6 Rear view camera

The rear view camera is used to monitor areas behind the vehicle.

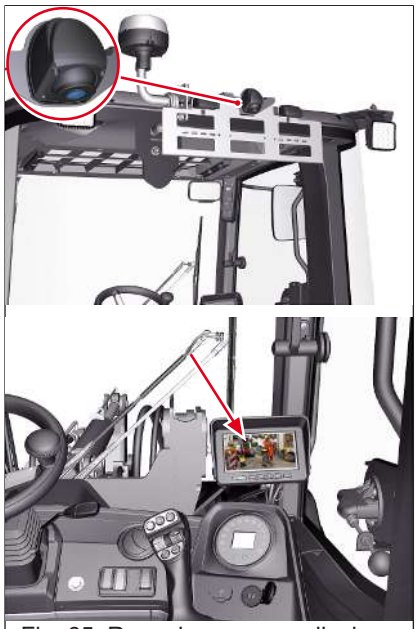

Fig. 65: Rear view camera display

Switch on lrear view camera

- Switch on ignition.

⇨ The images from the rear view camera are shown on the display in the cabin.

5.3 Display

5.3.1 Warning and indicator lights



NOTICE

Defective warning lights and control lights cannot correctly indicate operating states.

Warning lights and control lights indicate the operating status of the vehicle. If these lights are defective, possible faults, e.g. in the motor control, cannot be detected.

► Defective warning lights and control lights must be repaired immediately by an authorized service center.

Warning lights and control lights

The vehicle is equipped with warning lights and control lights.

Control lights serve as a source of information. As a rule, control lights are green, blue and yellow.

Warning lights serve to warn of damage to the vehicle. As a rule, warning lights are red or yellow.

Warning lights and control lights provide information about:

- activated functions
- current operating states
- Service information
- Machine status
- Error codes

The warning lights and control lights light up for a self-test after the ignition is switched on.

What to do if a warning light lights up during operation

If a warning light on the vehicle or engine electronics comes on during operation, proceed as follows:

1. Switch off the engine.
2. Switch on ignition.

⇨ No error code appears in the vehicle display, the warning and control lights have gone out again. It is safe to continue working.

⇨ An error code appears in the vehicle display. It is not safe to continue working.

⇨ If applicable, note down the error code and give it to the authorized service center

⇨ Park the vehicle. Read the information in the chapter on faults.

⇨ If necessary, contact an authorized service center.

5.3.2 Explanation of warning and control lights

The warning lights and control lights and their meanings are explained below.

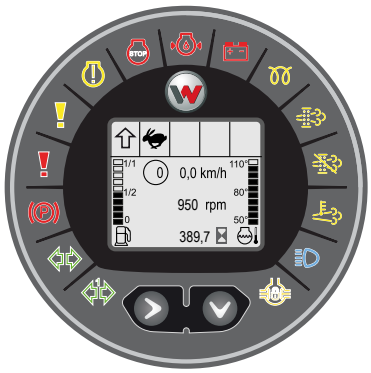

Fig. 66: Overview of warning lights and control lights

Symbol	Meaning	see chapter
	**“Parking brake” warning light** Lights up when the parking brake has been applied. The drive system is locked when the parking brake is applied.	see Operating the parking brake with a lever on page 100
	**“Turn indicator” control light** Flashes intermittently when the turn indicators or hazard warning lights are on. A rapidly-flashing indicator light indicates a defective turn signal.	see Operating the turn indicator on page 119
	**“Trailer turn indicator” control light** Flashes when the turn indicator is on when the attachment or trailer is connected. A rapidly-flashing indicator light indicates a defective turn signal.	see Operating the turn indicator on page 119
	**"Vehicle electronics” warning light** Lights up when there are serious errors in the vehicle electronics.	see Information on malfunctions on page 218
	**"Vehicle electronics” warning light** Lights up when there are errors in vehicle electronics.	see Information on malfunctions on page 218

Symbol	Meaning	see chapter
	**“Engine electronics” warning light** Lights up or flashes when there are serious errors in the engine electronics.	see Information on malfunctions on page 218
	**“Engine electronics” warning light** Lights up or flashes in the event of errors in the engine electronics.	see Information on malfunctions on page 218
	**“Engine oil pressure” warning light** Lights up when the ignition is switched on, but goes out as soon as the engine is started. Lighting up when the engine is running signals that the engine oil pressure is too low. In this case: 1. Stop the vehicle. 2. Stop the engine and check the oil level.	see Fill level engine oil on page 179
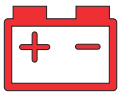	**“Battery charge” warning light** Lights up when the ignition is switched on, but goes out as soon as the engine is started. Lighting up when the engine is running signals that the battery is no longer being charged.	see Servicing the battery on page 210
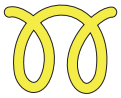	**"Preheating” control light** Lights up when the engine is preheated.	see Starting the engine on page 93
	**“High beam” control light** Illuminates when high beam or dipped beam is switched on.	see Changing over between low beam and high beam on page 118
	**“Differential lock engaged” control light** Lights up when differential lock is engaged.	see Operating the differential lock on page 128

5

5.3.3 Overview of the display

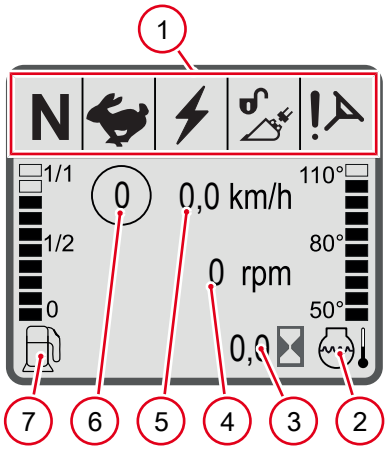

Fig. 67: Display

Item	Designation
1	Display with symbols for additional information
2	Engine temperature display
3	Operating hours indicator
4	Display for engine speed
5	Indicator for actual driven speed
6	Display for possible maximum speed (depending on selected speed range and driving mode)
7	Fuel level gauge for diesel tank

5.3.4 Reading information on the display

The symbols in the display serve as a source of information and indicate various operating states.

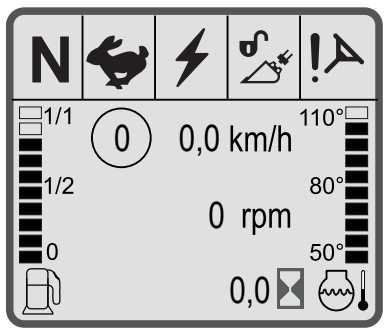

Fig. 68: Overview of the information on the display

Symbol	Meaning
	Symbol appears when driving in forward direction.
	Symbol appears when driving in reverse direction.
N	Symbol appears neutral in direction of travel.
	This symbol appears when high speed is switched on.
	This symbol appears when the crawler gear is switched on.
	The symbol appears when the electric function is switched on. Depending on the electric function that is switched on, 1, 2, 3 or 4 is displayed.
	This symbol appears when the hydraulic quick hitch system for attachments is unlocked.

Symbol	Meaning
	This symbol appears when the third control circuit is operating actively in continuous mode.
	This symbol appears when the belt contact is not actuated.
	This symbol appears when the hydraulic functions are locked for road travel.
	This symbol appears when lowering brake bypass is enabled.
	Symbol appears when the floating position is activated.
km/h	The display shows the vehicle speed.
rpm	This display shows the engine speed.
	This indicator shows the engine temperature.
	This display shows how many hours of operation the vehicle has completed.
	Display shows the fuel fill level.
	The indicator shows the remaining time until the next inspection.

5.3.5 Displaying error messages

Fault indications for the electronics

The vehicle display shows electronic faults with the following warning lights: (An error code may also be shown in position **1**.)

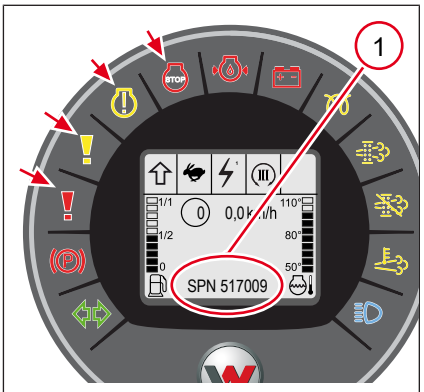

Fig. 69: Warning lights of the electronics in the display

Symbol	Meaning
	**Warning light for vehicle electronics** If the warning light lights up during operation, switch off the engine and switch on the ignition. • If no error code appears in the vehicle display: – Start the engine and resume vehicle travel. • If an error code appears in the vehicle display: Note the error code and contact an authorized service center.
	**Warning light for vehicle electronics** If the warning light lights up during operation, switch off the engine and switch on the ignition. • If no error code appears in the vehicle display: – Start the engine and resume vehicle travel. • If an error code appears in the vehicle display: Note the error code and contact an authorized service center.
	**Warning light for engine electronics** Illuminates or flashes if one or more engine-operation values are outside the normal range – stop the engine and switch on the ignition. • If no error code appears in the vehicle display: – Start the engine and resume vehicle travel. • If an error code appears in the vehicle display: Note the error code and contact an authorized service center
	**Warning light for engine electronics** Illuminates or flashes in case of one or more errors in the engine electronics. The engine switches itself off. If the engine does not switch itself off - turn it off. • If no error code appears in the vehicle display: – Start the engine and resume vehicle travel. • If an error code appears in the vehicle display: Note the error code and contact an authorized service center.

Error messages with symbol

Error messages can appear on the display in the form of symbols and in the form of error codes.

An overview of possible error messages is given below.

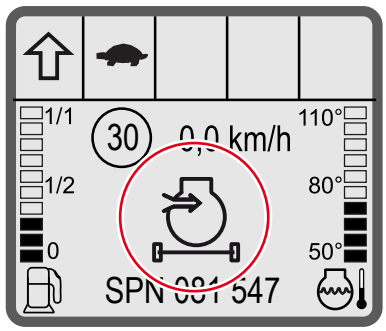

Fig. 70: Example: Error message shown as a symbol on the display

Symbol	Meaning
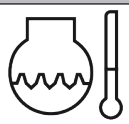	This symbol appears when the coolant temperature is too high.
	Symbol appears when the brake fluid level is too low.
	Symbol appears when the brake fluid level is too low.
	This symbol appears when the engine or hydraulic engine exceeds the permitted rotational speed.
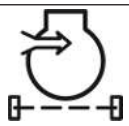	This symbol appears when the air filter contamination degree is too high.
	This symbol appears when the coolant level is too low.
	This symbol appears when the fuel line pressure is too low.
	This symbol appears when too much water has accumulated in the water separator on the fuel filter.
	The symbol appears when the maximum permissible temperature of the hydraulic oil is reached.
	The symbol appears when the engine oil needs to be changed.
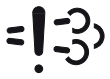	The symbol appears when an error has occurred in the exhaust aftertreatment.

Error messages with error code

NOTICE

Technical damage due to failure to observe the error code! Failure to observe the error codes can cause serious technical damage!

In case of a malfunction during vehicle operation, the operating hours and engine speed readout is replaced by an error code.

- ► Proceed as specified in the error code table.
- ► Get in touch with a service center if the error persists in spite of proceeding as specified.
- ► Make a note of error codes that are not listed and inform the service center of them.

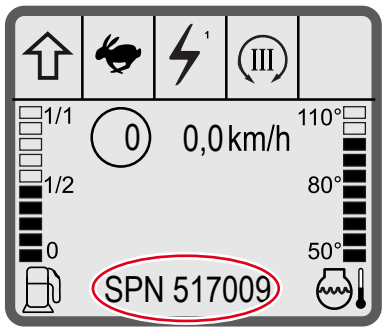

Fig. 71: Error message with error code

Measures to be taken when an error code emerges:

1. Shut down the vehicle immediately if one of the following warning lights lights up:
   ⇨ Or
2. Contact an authorized service center.
   ⇨ Have the error code ready for diagnosis.
3. Put the vehicle back into operation only after correcting the error.

If the engine switches off by itself, there is a critical error in the engine or in the engine electronics.

5.3.6 Display for inspections

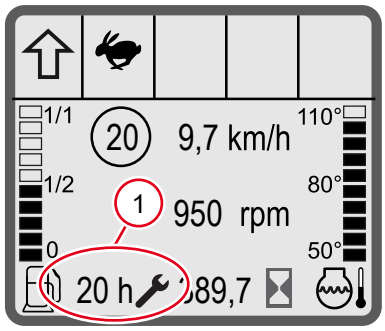

Fig. 72: Display for inspections

The symbol indicates that the inspection display is active. The inspection display shows the remaining time in operating hours **(h)** or weeks **(w)** at position **1**. If there are less than 30 operating hours until the next inspection, the remaining number of hours is shown continuously on the display.

If the inspection due time is exceeded, the display shows the hours which were counted since the inspection became due, with a (+) in front of the number of hours.

Once the inspection that was due has been carried out, the inspection display is reset by the authorized service center

5.3.7 Switching views on the display

The arrow buttons on the display are used to navigate through the menu.

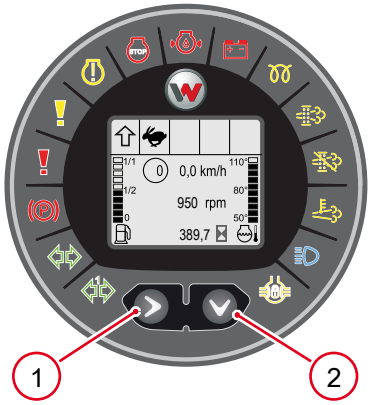

Fig. 73: Arrow buttons in the menu

Item	Designation
1	“Arrow right” menu key
2	“Arrow down” menu key

Pressing the arrow buttons allows you to switch to the next view on the display.

The main views that can be accessed by pressing the arrow button down are shown below.

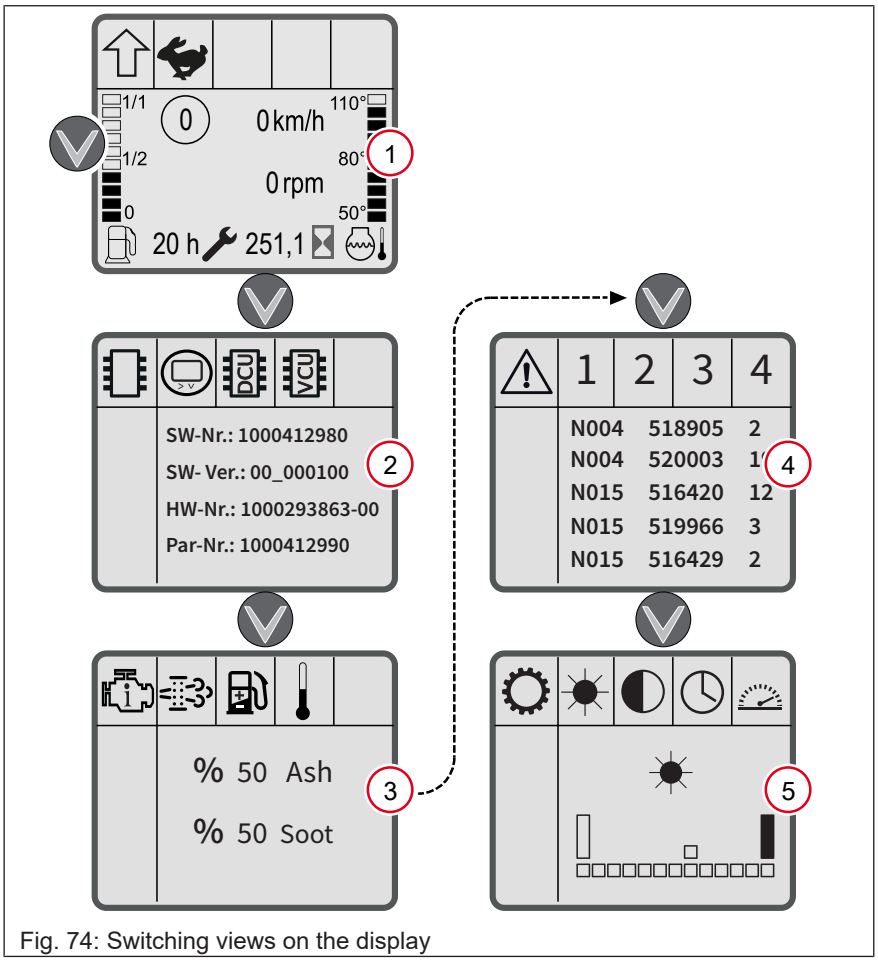

Fig. 74: Switching views on the display

Item	Designation	Page
1	Main menu	--
2	Control unit info menu	--
3	Engine info menu	--
4	Error menu	--
5	Display settings menu	--

In each main view, bottom views can be accessed by pressing the right arrow button. The bottom views provide additional information or the option to adjust display settings. If no button is pressed in a bottom view for 10 seconds, the main view reappears.

It is not possible to switch back to the previously displayed view. Instead, press the arrow button pointing down or to the right repeatedly until the previously displayed view reappears.

5.3.8 Control unit menu

The control unit menu shows information about the software and hardware of the vehicle's electronic components. This information is helpful when contacting an authorized service center.

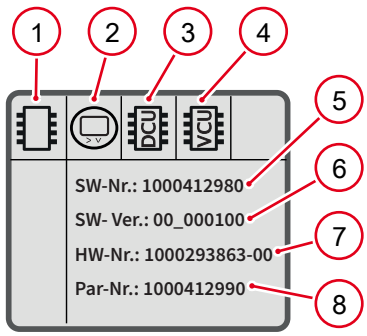

Fig. 75: Control unit menu

Item	Designation
1	Control unit info menu symbol
2	Display symbol
3	Traction drive control unit (DCU) symbol
4	Symbol of Vehicle Control Unit (VCU)
5	Material number of the software
6	Software version
7	Material number of the hardware
8	Material number of the parameter set

Press the right arrow button to switch to the individual components. The symbol of the selected component flashes.

5.3.9 Engine menu

The engine menu displays information about data measured by the engine electronics.

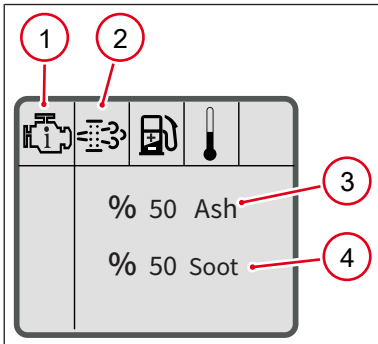

Fig. 76: Engine menu, diesel particulate filter

Item	Designation
1	Engine info menu symbol
2	Diesel particulate filter info symbol
3	Ash load display “Ash” in %
4	Soot load display “Soot” in %

The engine menu initially displays information about the diesel particulate filter. Press the right arrow button to switch to information about fuel consumption and temperature. The symbol for the selected type of information flashes.

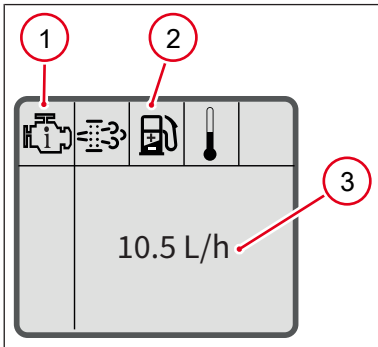

Fig. 77: Engine menu, fuel consumption

Item	Designation
1	Engine info menu symbol
2	Fuel consumption info symbol
3	Fuel consumption display in liter/hour

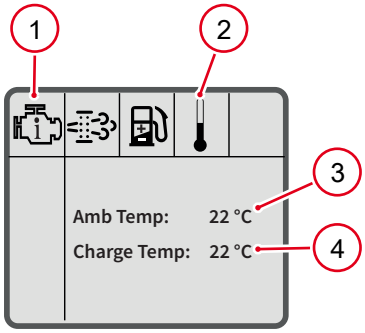

Fig. 78: Engine menu, temperature display

Item	Designation
1	Engine info menu symbol
2	Temperature info symbol
3	Ambient air temperature display in °C
4	Charge air temperature display in °C

5.3.10 Error menu

The error menu shows the error codes sent by the vehicle's electronic components. This information is helpful when contacting an authorized service center.

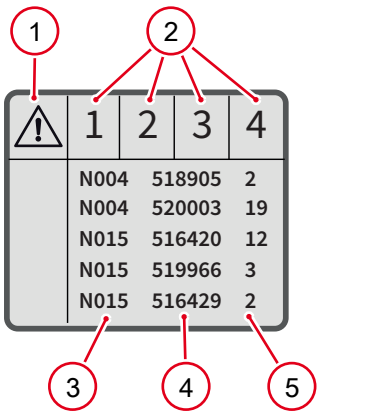

Fig. 79: Error menu

Item	Designation
1	Error display menu symbol
2	Error code pages
3	Identification of the electronic component that reported the error.
4	Error SPN
5	Error FMI

If no error code is displayed, there is no error.

A maximum of five error codes are displayed per page, and a maximum of twenty error codes are displayed on four pages. The number of the selected error page flashes.

The error codes are displayed in the sequence in which they occurred. The most recent error is at the top of the list.

5.3.11 Settings menu

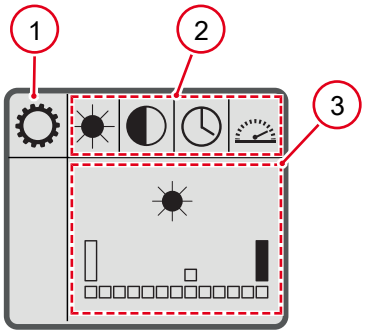

Fig. 80: Display settings menu

Item	Designation
1	Settings menu symbol
2	Display settings menu page
3	Settings range

In the settings menu, settings can be made for:

- Brightness
- Contrast
- Date / Time
- Display units

The settings menu first displays options for setting the brightness of the display. Press the right arrow button to switch to the other settings options. The symbol of the selected setting option flashes.

If no button is pressed for 10 seconds or if the right arrow button is pressed in the setting option,the current setting is accepted.

Set the display brightness

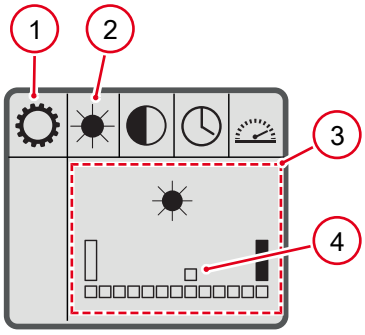

Fig. 81: Settings menu, brightness

Item	Designation
1	Settings menu symbol
2	Brightness symbol
3	Settings range
4	Position display

✓ The settings menu for the brightness of the display is selected.

✓ The symbol for brightness in the menu bar flashes.

1. Press the down arrow button.
   ⇨ The display settings area is activated.
   ⇨ The symbol for brightness in the settings area flashes.
2. Press the right arrow button repeatedly until the desired brightness of the display is reached.

⇨ The position display **4** indicates the set brightness.

Set the display contrast

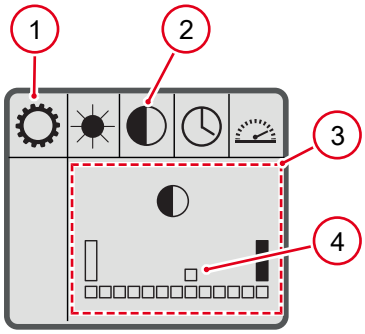

Fig. 82: Settings menu, contrast

Item	Designation
1	Settings menu symbol
2	Contrast symbol
3	Settings range
4	Position display

✓ The settings menu for the display contrast is selected.

✓ The contrast symbol in the menu bar flashes.

1. Press the down arrow button.
   ⇨ The display settings area is activated.
   ⇨ The contrast symbol in the settings area flashes.
2. Press the right arrow button repeatedly until the desired display contrast is reached.

⇨ The position indicator **4** shows the set contrast.

Setting the date and time in the display

The display of date and time depends on the unit setting.

Depending on the setting, the display shows metric or imperial units.

Press the down arrow button to switch to the setting options in the following sequence:

YYYY – MM – DD – hh – mm. The symbol of the selected setting option flashes.

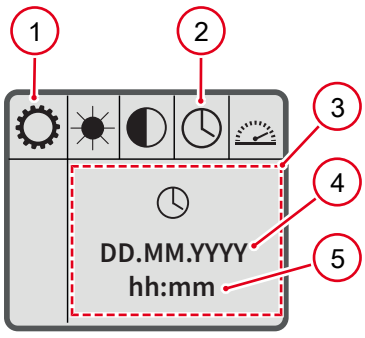

Fig. 83: Settings menu, date and time metric

Item	Designation
1	Settings menu symbol
2	Date/time symbol
3	Settings range
4	Date
5	Time

Item	Meaning
DD	Date, day
MM	Date, month
YYYY	Date, year
hh	Time, full hours
mm	Time, minutes

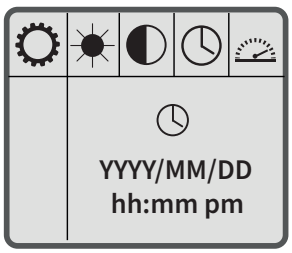

Fig. 84: Settings menu, date and time imperial

✓ The settings menu for date and time is selected.

✓ The date and time symbol in the menu bar flashes.

1. Press the down arrow button.
   ⇨ The display settings area is activated.
2. Select the desired setting option.
   ⇨ The symbol for the selected setting area flashes.
3. Press the right arrow button.
   ⇨ The value increases by one with each button press. After reaching the maximum value, the value jumps back to the minimum value.
4. Press and hold the right arrow button.
   ⇨ The value increases in steps of two.
5. Press and hold the right arrow button for more than three seconds.
   ⇨ The value increases in steps of five.

⇨ The date and time are set as desired.

Setting units in the display

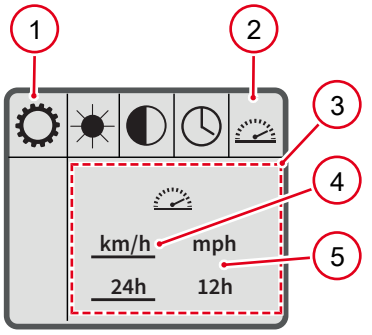

Fig. 85: Display unit setting menu

Item	Designation
1	Settings menu symbol
2	Units symbol
3	Settings range
4	Display unit - metric
5	Display unit - imperial

✓ The settings menu for the units is selected.

✓ The symbol for units in the menu bar flashes.

1. Press the down arrow button.
   ⇨ The display settings area is activated.
   ⇨ The units symbols in the settings area flashes.
2. Press the right arrow button to select either metric or imperial units.
   ⇨ The underline marks the selected unit.
3. Press the down arrow button to confirm the selection.

⇨ The units are set as desired.

5.4 Putting the vehicle into operation

5.4.1 Before putting into operation

Before putting into operation, the following requirements must be met:

- Read and understand the operator's manual.
- Learn and understand fault indications on the display.
- Operate the vehicle only from the operator seat.
- Have technically trained personnel instruct you before using the vehicle for the first time. Carry out driving tests on spacious terrain.
- Check the condition of the vehicle to ensure that it is safe and that the protective devices are intact.
- Ensure that all maintenance has been carried out in accordance with the maintenance schedule.
- If necessary, remove dirt and ice from the windows before driving.
- Have the vehicle checked by technically trained personnel before putting it into operation again after it has been out of operation over a longer period of time.
- Switch on the battery disconnect switch.

Additional note: see Preparative measures on page 21.

Set up control stand:

1. Adjust the seat.
2. Adjust the steering wheel.
3. Adjust the mirrors.
4. Fasten the seat belt.
5. Deactivate drive interlock if necessary.
6. Release parking brake.
7. Turn off all switches and control elements.

⇨ Start the vehicle.

5.4.2 Information on avoiding engine damage



NOTICE

The engine may be damaged!

- ► Do not put full load on the engine immediately after starting.
- ► Allow the engine to idle for approx. three minutes. Then slowly increase the speed.
- ► Do not fully load the engine during the first 100 operating hours.
- ► Do not use any additional starting aids (e.g. start pilot).
- ► Contact an authorized service center if the engine does not start.



NOTICE

The starting motor may be damaged!

- ► Do not start the engine again immediately after stopping it. Wait at least 15 seconds.
- ► Abort the start attempt after a maximum of 15 seconds if the engine does not start.
- ► Wait one minute between two start attempts.

To avoid engine damage, follow the instructions in this section.

Due to the hydrostatic traveling drive, the engine cannot be started by towing the vehicle.

Fuel, engine and hydraulic oil preheating recommended for operation at outside temperatures below -10°C.

Running-in period

The engine must be use gently during the first 100 operating hours. Follow the instructions below.

- Drive and work gently with the vehicle.
- Avoid loading the engine at idling speed.
- Do not run the engine continuously at maximum speed.
- Increase load gradually while varying the engine speed.
- Observe the prescribed maintenance intervals and have the maintenance carried out accordingly.

5.4.3 Battery disconnect switch



NOTICE

Risk of technical damage

- ► If the battery disconnect switch is removed, cover the opening with the protective cap to prevent moisture from entering the switch.
- ► Never switch the battery isolating switch under load.
- ► Switch on the battery isolating switch, only then insert the ignition key.
- ► Remove the ignition key, wait 30 seconds, then switch off the battery isolating switch.

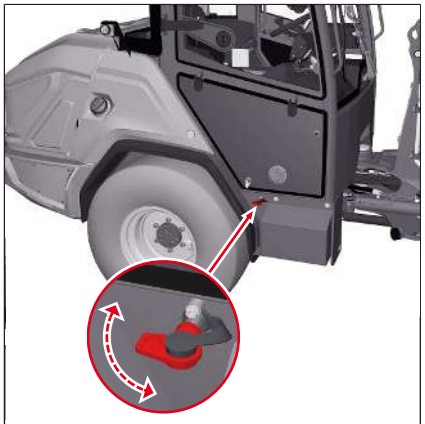

Fig. 86: Position of the battery disconnect switch

The complete electrical system can be quickly separated from the battery in an emergency by means of the battery master switch. Switch off the battery overnight to avoid discharging the battery or to prevent other possible damage. The battery master switch can also be used as an additional anti-theft device when the battery master switch is removed.

Operating the battery disconnect switch

The battery disconnect switch is located on the right side under the cabin next to the battery.

Switching off the battery master switch

1. Switch off the engine.
2. Operate and remove the battery master switch.

⇨ The battery is disconnected from the electrical system.

Switching on the battery master switch

- Insert and operate the battery master switch.

⇨ The battery is connected to the electrical system.

5.4.4 Battery master switch

The vehicle can optionally be equipped with a battery cut-off relay. The battery disconnect relay separates the electrical system from the vehicle battery. The battery cut-off relay is operated using the switch shown in the dashboard.

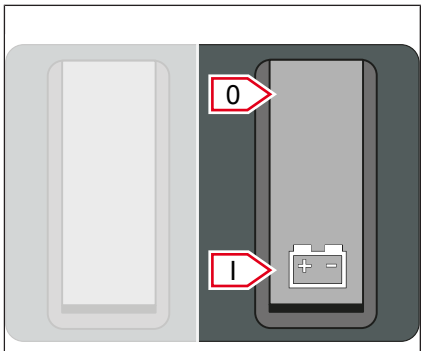

Fig. 87: Switch for battery cut-off relay

The switch has two switch positions. Switch position **0** separates the electrical system from the vehicle battery. After pressing the switch, it takes up to two minutes until the electrical system is completely de-energized to protect system components from damage. To start the vehicle, the switch must be set to switch position **I**.

- Move the switch to position **I**.
  ⇨ The electrical system is connected to the vehicle battery.

⇨ The vehicle can be started.

- Move the switch to position **0**.
  ⇨ The electrical system is disconnected from the vehicle battery after approx. two minutes.

If the switch is set to switch position **0** during operation, the electrical system does not disconnect until the ignition is switched off.

5.4.5 Engine and hydraulic oil preheating



⚠ WARNING

Risk of injury due to electric shock!

The engine and hydraulic oil preheating is operated with 115 volts. Defective cables can lead to electric shocks which can result in death or serious injury.

► Run the engine and hydraulic oil preheating only in a dry place.
► Immediately replace malfunctioning cables.

NOTICE

Inadequate coolant and hydraulic oil levels can damage the heating cartridge of the preheating unit!

- ► Use preheating only for cold starts for operating times described in the table (overheating protection).
- ► Ensure the correct coolant and hydraulic oil level before each heating, otherwise the heating cartridges may burn out.
- ► Check for leaks, even when the vehicle is warm.
- ► The coolant must always have a sufficient amount of antifreeze compound.
- ► Check cables regularly for damage or aging. Immediately replace a damaged cable.

The vehicle can be fitted with an engine and hydraulic oil preheating. It preheats the coolant and the hydraulic oil. The following operating times are recommended depending on outside temperatures:

Temperature °C	Operating time in hours (h)
-20°	3
-10°	2
-5°	1.5
0°	1
+10°	1

Prerequisites for connection of engine and hydraulic oil preheating

- 115 volt mains supply
- Maximum 16 ampere fuse protection
- Residual current circuit breaker
- Schuko socket

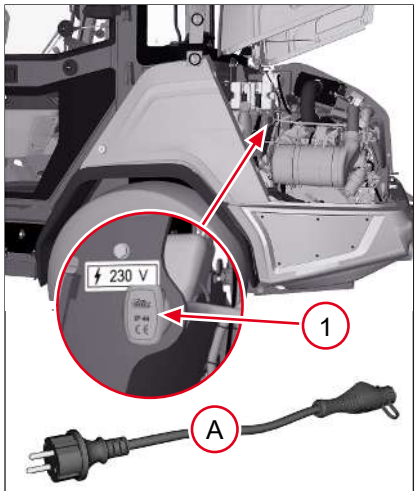

Fig. 88: Connect engine preheating and hydraulic oil preheating

Connect engine preheating and hydraulic oil preheating

1. Park the vehicle near a plug receptacle with a fault current protective switch.
2. Open the engine hood.
3. Connect special cable **A** supplied with vehicle plug receptacle **1**.
4. Insert plug into the plug receptacle.

⇨ Coolant and hydraulic oil are preheated.

Before the engine starts

1. Pull the plug out of the plug receptacle.
2. Unplug special cable **A** from vehicle plug receptacle **1**.
3. Close the engine hood.
4. Securely store special cable **A**.

⇨ The engine can be started.

5.4.6 Starting the engine

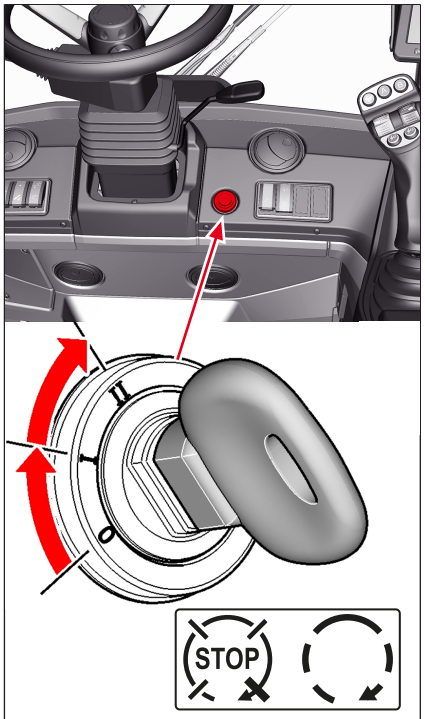

Fig. 89: Turn the starting key

Start the engine as follows:

✓ Parking brake of the vehicle is activated.

✓ Battery disconnect switch is switched on.

1. Insert the starting key in the starter lock.
   ⇨ Position **0** - no operating voltage
2. Turn the ignition key to position **I**.
   ⇨ All warning lights and indicator lights illuminate for self-test.
3. Wait until the indicator light “Preheating” goes out.
4. Turn the starting key via the resistor to position **II**.
   ⇨ Starter is actuated - the engine starts.
5. Release the starting key as soon as the engine starts.
   ⇨ The starting key returns to position **I**.

⇨ The indicator lights must go out.

If one of the warning lights does not go out during starting (except for the parking brake), stop the engine and have the cause checked by an authorized service center.

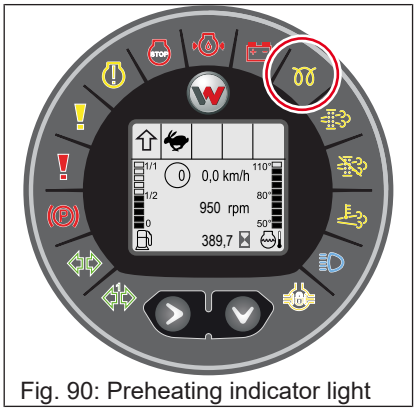

Fig. 90: Preheating indicator light

Preheat engine

Preheating is started automatically when the starting key is turned to position **I**.

- Above 0 °C outside temperature, the preheating process takes approx. five to ten seconds.
- Below 0 °C, the preheating process takes approx. 15 - 60 seconds.

The preheating process is completed as soon as the indicator light in the display goes out.

Start the engine as soon as the indicator light goes out.

If the engine does not start



NOTICE

The drive system may be damaged!

Due to the hydrostatic drive system, the engine cannot be started by towing the vehicle.

► Do not attempt to start the engine by towing the vehicle.

1. Operate the starter continuously for a maximum of 15 seconds.
2. Wait one minute.
3. Repeat the start procedure.

⇨ If the engine does not start after trying twice, search for the cause with the troubleshooting table or contact an authorized service center.

5.4.7 Drive interlock with key system

The drive interlock is integrated in the starter lock and can be disabled only with the blue starting keys.

The equipment of the vehicle with drive interlock is included in the scope of delivery:

- Drive interlock installed in the vehicle.
- Two coded blue starting keys.
- One red master key.

Coding new starting keys

New personal starting keys can be coded with the red master key. Store the red master key carefully and separately from the vehicle.

The drive interlock has only one master key. If the master key is lost, the complete drive interlock must be replaced by an authorized service center.

The master key can only be used to code new starting keys. The drive interlock cannot be deactivated with the master key.

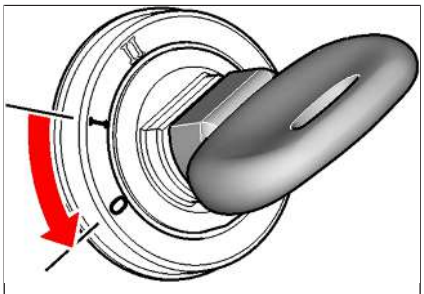

Fig. 91: Teaching the starting key

✓ Blue starting keys and master keys to be coded are available.

✓ Switch on the parking light to code new blue starting keys.

1. Insert the master key into the starter.
2. Switch the ignition to position **I** for a maximum of five seconds.
3. Switch ignition to position **0** and remove master key.
   ⇨ The electronics system expects a starting key to be coded within the next 15 seconds.
4. Insert the blue ignition key and switch the ignition to position **I** for at least one second.

⇨ The new blue starting key has been taught/coded.

If several starting keys are to be coded, the starting keys to be coded can be coded one after the other without having to reinsert the master key into the starter. However, no more than 15 seconds must elapse between

the removal of the master key or the starting key that has been coded and the next starting key to be coded. Repeat the procedure from step **I** if more than 15 seconds have elapsed.

Store the master key outside the cab to avoid incorrect information from the electronics system, e.g. the signal from the master key and an additional signal from a coded starting key.

Enabling the drive interlock

Always remove the starting key when the drive interlock is to be switched on. If the starting key is left inserted, the drive interlock is not activated.

1. Apply the parking brake.
2. Move ignition to position **0**.
3. Remove the starting key.

⇨ The drive interlock is activated after 30 seconds.

Disabling the drive interlock

1. Insert the starting key in the ignition lock.
   ⇨ The drive interlock is deactivated after five seconds.
2. Start the engine.

⇨ The drive interlock is permanently deactivated when the engine is running.

Deleting a taught key

If a coded blue starting key is lost, all other coded keys must be deleted. The master key code is not deleted during the deletion process.

After the deletion process, the remaining stating keys can be coded anew.

1. Switch on the parking lights.
2. Insert the master key into the starter.
3. Switch ignition to position **I** for at least 20 seconds.
   ⇨ Coding for the blue starting key is deleted.
   ⇨ Blue starting keys can be recoded.

Safety functions

1. If more than 5 keys with different invalid codes are operated in the starter within 1 minute, the drive interlock remains activated for 15 minutes and does not accept any valid keys during this time.
2. This procedure prevents the "trying out" of different keys and the accidental finding of the correct key.
3. Accepting valid keys only takes place after the 15 minutes and the recognition of position **I** of the starter. This prevents keys from being tested without actuating the mechanical starter, e.g. if the starter has been forcibly moved to position **I**.
4. Interrupting the supply line or other control lines does not lead to deactivating the drive interlock or deleting data (e.g. data codes).
5. All relevant data are stored in a non-volatile memory

5.4.8 EquipCare Dual ID keypad to unlock the vehicle

A personal identification number (PIN) for unlocking the vehicle is entered via the keypad. The vehicle can only be started after entering the PIN via the keypad

Use PIN

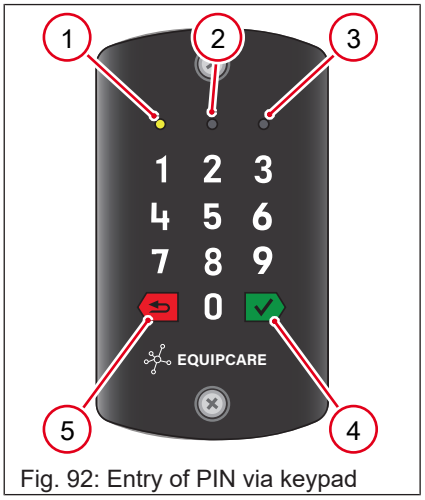

Fig. 92: Entry of PIN via keypad

Item	Designation
1	LED 1 - lights up orange when the keypad is ready
2	LED 2 - without function
3	LED 3 - lights up green when the input is correct. Does not light up if PIN is incorrect
4	Confirms the PIN entry
5	Cancels the entry and allows the PIN to be entered again

The operator can set the PIN in EquipCare Manager at the following link equipcare.wackerneuson.com. As long as no PIN has been stored via EquipCare Manager, the vehicle can also be started without a PIN.

1. LED **1** lights orange.
2. Enter the PIN using the keypad.
3. Confirm entry with button **4**.

⇨ LED **3** lights up green if the entry is correct.

⇨ If an incorrect PIN has been entered, LED **3** does not light up.

⇨ The vehicle cannot be started.

If a wrong PIN is already noticed during the input, the input can be canceled via button **5**.

5.4.9 Do not operate the engine at low load

Engine running performance can be negatively affected if the vehicle is operated at high engine speed and at less than 20% of the load. Possible consequences of low-load operation:

- The operating temperature is too low.
- The lube-oil consumption rises.
- Engine contamination due to lubricating oil in exhaust system.
  - This contamination is recognizable by bluish exhaust gases; lubricating oil is burnt.

Operate the engine at a load greater than 20 %.

5.4.10 Stopping the engine



NOTICE

Damages to the engine!

If the engine is switched off directly from full load operation, the engine may be damaged due to an excessively high operating temperature.

► Allow the engine to idle for approx. three minutes.

► Then switch off the engine.



NOTICE

Immediate starting of the engine after shutdown can cause damage to the starting motor.

► Wait approx. 15 seconds before restarting the engine.

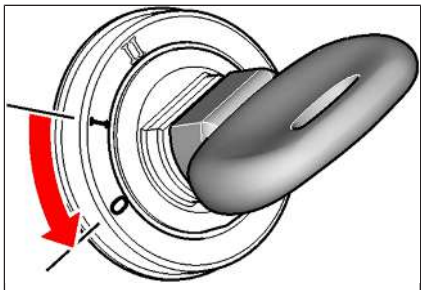

Fig. 93: Move starting key to position 0

1. Lower the loader unit to the ground.
2. Secure the vehicle with the parking brake.
3. Switch off all electric consumers.
4. Allow the engine to idle for approx. three minutes.
5. Move starting key to position **0**.
6. Remove the starting key.

5.4.11 Jump-starting the engine



⚠ WARNING

Connecting the jumper cable to the negative terminal of the discharged battery can lead to accidents.

Batteries can release oxyhydrogen gas, which can easily ignite if sparks form and cause serious injury.

► Do not connect the jumper cable to the negative terminal of the discharged battery.



NOTICE

The electrical system can be damaged by a short-circuit when starting from another source.

- ► Make sure that both vehicles do not touch each other.
- ► Do not jump-start the vehicle if the battery is malfunctioning or frozen.
- ► Do not connect two batteries in series.
- ► Use starting aid batteries with the same voltage.
- ► Use tested jumper cables with sufficient cross-section and insulated terminal clamps.
- ► Route jumper cable so that they cannot be caught by starting or rotating parts in the engine compartment.

1. Switch off the battery disconnect switch.
2. The electrical system is voltage-free after an afterlap period.
3. Move jump-starting vehicle (charged battery) up to the vehicle receiving power (battery to be charged).
   ⇨ Make sure that both vehicle do not come in contact, but the jumper cables can be connected.
4. Move all control levers and switches on the jump-starting vehicle to zero position.
5. Switch off ignition of the jump-starting vehicle, since voltage spikes can damage the vehicle's electronics during jump starting.

⇨ Jumper cable can be connected.

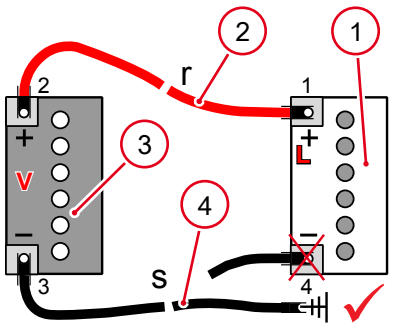

Fig. 94: Scheme for connecting batteries

Item	Designation
1	Discharged vehicle battery
2	Red jumper cable (positive terminal)
3	Charged, current-generating vehicle battery; external power pack
4	Black jumper cable (ground point)
L	Discharged vehicle
V	Fully charged vehicle

Connect jumper cable

Use jumper cables of sufficient length and sufficient cable cross-section.

✓ Battery cover is removed.

✓ Battery terminal covers are removed.

1. Connect the red jumper cable **2** to the positive terminal of the discharged battery **1**.
2. Connect the other end of the red jumper cable **2** to the positive terminal of the battery supplying power **3**.
3. Connect the black jumper cable **4** to the negative terminal of the battery supplying power **3**.
4. Connect the other end of the black jumper cable **4** to an electrically conducting point, e.g., on the engine block or the axle fastener of the vehicle receiving power.
   ⇨ Do not connect the jumper cable to the negative terminal of the discharged battery, since explosive vapors may ignite in case of sparking. Maintain a distance of 30 cm at least to the battery.
5. Switch on the battery disconnect switch.
6. Starting the vehicle engine with the fully charged battery.
7. Start the engine of the vehicle with the empty battery.
   ⇨ If the vehicle's engine does not start after 15 seconds, wait one minute and repeat the process.

Once the engine has started

1. Disconnect the black jumper cable **4** from the engine block of the vehicle receiving power.
2. Disconnect the black jumper cable **4** from the negative terminal of the battery supplying power.
3. Disconnect the red jumper cable **2** from the positive terminal of the battery supplying power.
4. Disconnect the red jumper cable **2** from the positive terminal of the discharged battery.
5. Replace battery terminal covers again.
6. Screw on the battery cover.

6 Operation

6.1 Brakes

6.1.1 Operating the service brake



⚠ WARNING

Accident hazard due to blocked or dirty pedals!

Loose objects in the cab or dirty pedals can impair the function of the pedal and lead to accidents with serious injuries or death.

► Keep pedals clean.

► Do not place any objects in the area of the pedals.

Inching function

The inching function regulates the supply of the traveling drive with hydraulic oil. If the brake/inching pedal is not actuated, the traveling drive has the full oil volume available. The more the brake/inching pedal is actuated, the less the oil flow provided to the traveling drive. The output from the working hydraulics is not impaired. Owing to this rule, even with a high engine speed you can drive very slowly, while the full engine output is available to the working hydraulics.

If the brake/inching pedal is actuated even more, the vehicle's service brake will be actuated.

Brake function

The vehicle's braking function is already achieved with inching. If the brake/inching pedal is actuated more, the vehicle braking system will be actuated hydraulically.

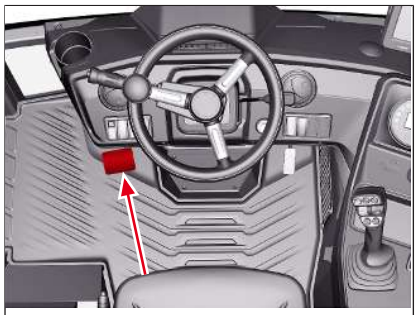

Fig. 95: Brake/inching pedal

Inching with the brake/inching pedal

In the inching range - pedal pressed lightly- the pedal can be used like a car's clutch. In this case, the traveling drive is supplied with less hydraulic oil.

Braking with the brake/inching pedal

- Press the pedal.
  - ⇨ A firm resistance can be felt after half the pedal travel at the latest. The brake lights are on.

⇨ The vehicle brakes.

6.1.2 Display for overspeed



⚠ WARNING

Risk of accidents due to improper speed!

Improper speed can lead to accidents that can result in serious injury or death.

► If you are overspeeding, reduce the driving speed by pressing the brake pedal.

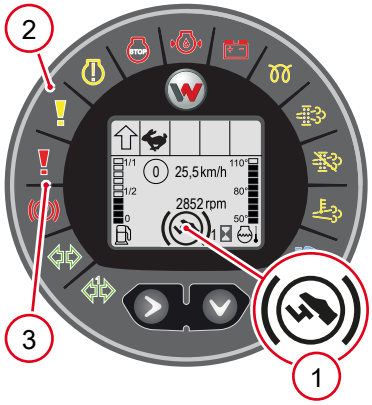

Fig. 96: Overspeed symbol in display

If the vehicle is going too fast (e.g. when driving downhill), vehicle electronics will warn you the speed is too high. Symbol **1** is shown in the display.

Warning level 1: The indicator light **2** lights up and an intermittent signal tone sounds.

- In this case, brake the vehicle with the brake pedal until the indicator light goes out and the signal tone stops.

If the vehicle is not braked sufficiently or not at warning level 1, warning level 2 follows.

Warning level 2: The warning lights **3** up and a continuous signal tone sounds.

1. In this case, use the brake pedal to brake the vehicle to a standstill.
2. Switch off the ignition.
   ⇨ The warning light goes out and the signal tone stops.
3. Switch on ignition.

⇨ If the error code does not appear on the vehicle display, you can continue driving.

⇨ If an error code appears in the vehicle display, contact an authorized specialist workshop.

6.1.3 Operating the parking brake with a lever



⚠ CAUTION

Risk of accidents when activating the parking brake while driving!

The parking brake may only be used in an emergency and as an auxiliary brake while driving if the service brake has failed. Danger of injury.

► In normal operation, use the brake/inching pedal for braking.

► Only activate the parking brake while driving in an emergency.

The vehicle can be secured against unintentional rolling away with the parking brake. Apply the parking brake before exiting the vehicle.

The parking brake control lever is located to the left of the seat.

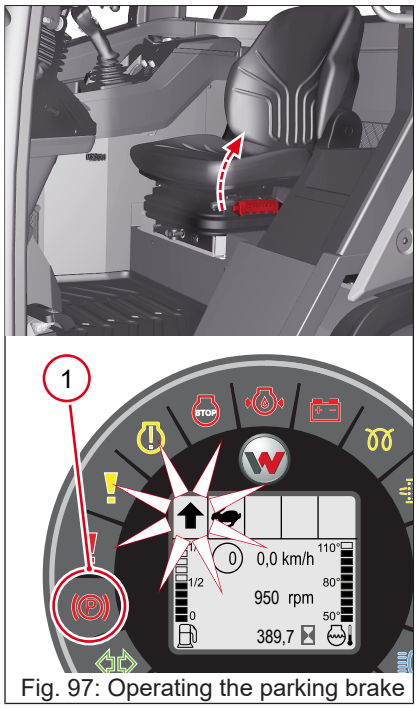

Fig. 97: Operating the parking brake

Apply the parking brake

- Pull the lever in the direction of the arrow.
  - ⇨ Lever engages.
  - ⇨ Indicator light **1** lights up in the display.

⇨ The parking brake is activated.

Drive interlock

When the parking brake is applied, the vehicle's traveling drive is deactivated. Indicator light **1** lights up in the display.

When the parking brake is applied and the drive direction is switched on, the driving direction symbol in the display flashes.

When the parking brake is released, the indicator light **1** goes out and the traveling drive is active again. You can drive again.

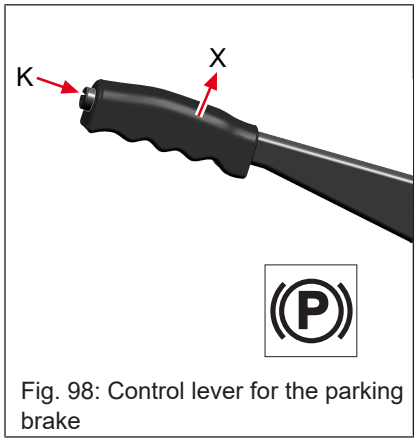

Fig. 98: Control lever for the parking brake

Release parking brake

1. Pull the lever slightly upwards towards **X** and press button **K** with your thumb.
   - ⇨ Latch of the lever is released.
2. Push the lever down completely.
   - ⇨ Indicator light **1** goes out.

⇨ Parking brake is released.

6.1.4 Operating the parking brake switch



⚠ CAUTION

Risk of accidents when activating the parking brake while driving!

The parking brake may only be used in an emergency and as an auxiliary brake while driving if the service brake has failed. Danger of injury.

► In normal operation, use the brake/inching pedal for braking.

► Only activate the parking brake while driving in an emergency.

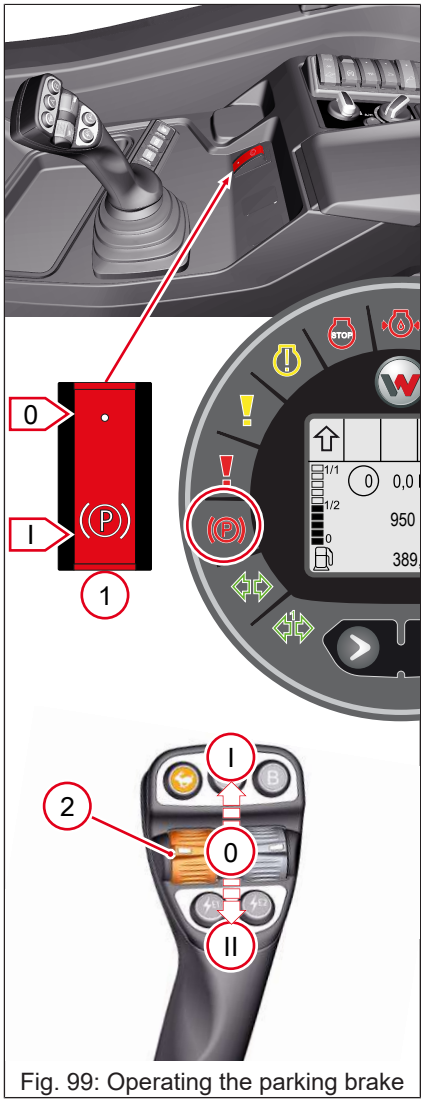

Fig. 99: Operating the parking brake

The parking brake secures the vehicle against unintentional rolling away.

When the engine is switched off, the parking brake is automatically activated. When the parking brake is activated and the ignition is switched on, the warning light **(P)** illuminates in the display instrument.

Deactivating the parking brake

- Press switch **1** briefly in position **I** or select the travel direction with scroll wheel **2**.
  - ⇨ Warning light **(P)** goes out.

⇨ Parking brake is released.

Activating the parking brake

✓ Apply the parking brake only when the vehicle is stationary.

- Press switch **1** to position **I** or switch off the engine.
  - ⇨ Warning light **(P)** illuminates.

⇨ The parking brake is activated.

When the engine is running and the parking brake is activated, the symbol for the travel direction flashes in the display if a travel direction has been selected.

Auto-hold function

The parking brake is activated automatically in the following cases:

- When the vehicle is stationary
- When the travel direction is set to **0**.
- When the driver leaves the seat.

When the parking brake is automatically activated, the vehicle's drive system is switched off. This is indicated by the warning light **(P)** flashing. As long as the warning light **(P)** is flashing, you can continue driving by depressing the accelerator pedal. Changing the drive direction is possible. The warning light goes out as soon as driving continues.

6.2 Steering

6.2.1 Steering modes



⚠ WARNING

Accident hazard due to steering system not working correctly!

Driving with a defective steering system can lead to accidents and injuries or death.

- ► Check that the steering system is working before starting a journey.
- ► Do not drive the vehicle if the steering system is defective.
- ► Have the steering system that is not working correctly repaired by a service center before continuing to drive the vehicle.

The steering system is controlled via the steering wheel. The steering wheel acts via a steering column and a steering orbitrol on double-acting hydraulic cylinders.

- Turn the steering wheel to the left.

⇨ The vehicle travels to the left.

- Turn steering wheel to the right.

⇨ The vehicle travels to the right.

6.3 Drive

6.3.1 Warnings for driving



⚠ WARNING

Risk of injury due to the vehicle tipping over!

A tipping vehicle can lead to serious injury or death.

There is an increased risk of tipping when driving in curves.

When the attachment is loaded, the weight ratios of the vehicle change.

- ► Keep the loader unit as close as possible to the ground when moving.
- ► Do not exceed the permissible payload.
- ► Adjust travel speed.
- ► Always wear your seat belt.
- ► Close the restraining bars/cab doors.



⚠ WARNING

Risk of accident due to restricted field of vision!

People and objects can be overlooked due to a limited field of vision.

- ► Check field of vision before putting into operation.
- ► Adjust the mirrors before commissioning the vehicle.
- ► Remove obstacles within the work area.
- ► Move the loader unit to the transport position when moving loads.
- ► Ensure a clear field of vision using suitable measures (e.g. guide or camera).



⚠ CAUTION

Risk of accident due to reduced visibility!

Frozen windows can lead to a restricted view of your surroundings and thus to accidents with minor injuries.

- ► Remove ice from windscreens before starting the journey.



⚠ CAUTION

Risk of accidents due to snow and ice on roads and paths!

Failure to adjust the speed may result in accidents with minor injuries on snowy or icy roads and paths.

- ► Reduce travel speed.



NOTICE

The engine may be damaged if the vehicle is in an extremely inclined position or tips over.

If the vehicle has tipped over, proceed as follows:

- ► Switch off the ignition immediately and remove the key.
- ► Right the vehicle again as soon as possible.
- ► Do not start the engine after righting the vehicle.
- ► Contact an authorized service center. The vehicle must be checked and released by technically trained personnel prior to restarting.



Environment

Environmental damage due to leaking vehicle fluids.

Leaking vehicle fluids may get into the soil or water.

- ► If the vehicle has tipped over, erect it again as quickly as possible so that no operating materials can spill.
- ► Catch leaking vehicle fluids using a suitable container if that can be done safely and dispose of it in an environmentally friendly manner.
- ► Notify the competent authorities if vehicle fluids have leaked out.

6.3.2 Selecting a speed range

The vehicle has two speed ranges. The speed that can be reached depends on the engine speed selected.

Symbol	Speed range	Recommended activity
	Crawler gear: 0 - 10 km/h	For work requiring precise speed adjustment.
	High speed: 0 - 30 km/h	For transportation.

Vehicle performance faster than 20 km/h

Vehicles with a design-induced maximum speed of more than 20 km/h have special requirements for the operator and the owner. A different driving license may be required for the operator. The owner must fulfill the insurance obligation for the vehicle.

Furthermore, there may be an obligation to register the vehicle for public road traffic and an obligation to affix license plates to the vehicle.

The responsibility for meeting these requirements and obligations lies solely with the owner of the vehicle.

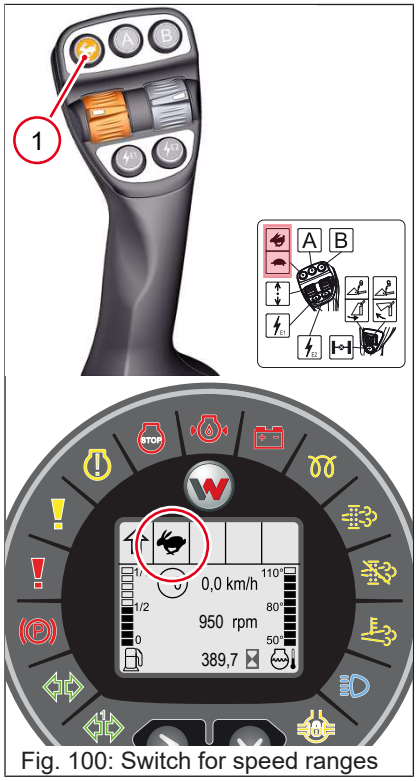

Fig. 100: Switch for speed ranges

Changing speed range

- Press button **1**.
  - ⇨ The speed range changes from crawler gear to high speed, or from high speed to crawler gear.
  - ⇨ The corresponding symbol is shown in the display.

When restarting the vehicle, the last selected speed range is automatically switched on.

6.3.3 Selecting the direction of travel



⚠ WARNING

Accident hazard when changing drive direction during vehicle travel!

Changing the direction of travel while driving means that the vehicle immediately travels in the opposite direction. This may result in accidents that could result in serious injury or death.

► Do not change the drive direction while driving.

► First stop the vehicle completely, then select the drive direction.

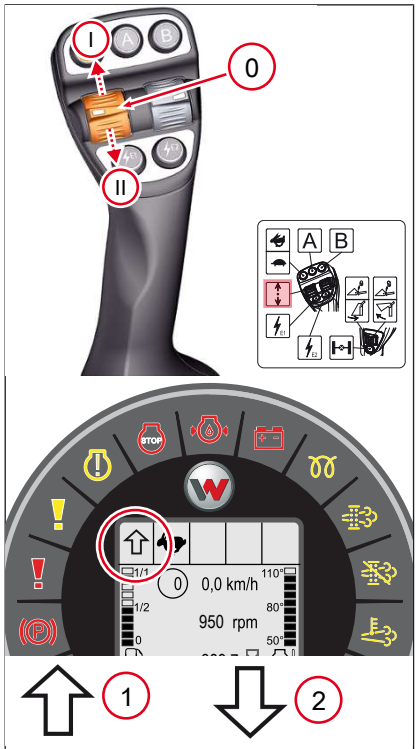

Fig. 101: Switching the drive direction

Item	Designation
1	Forward travel direction symbol
2	Reverse travel direction symbol

Use the switch to select the drive direction of the vehicle. After starting the engine, the direction switch is in zero position, regardless of the switch position.

- Set switch in position **0**.
  - ⇨ Symbol **N** appears in the display.

⇨ No direction of travel switched on.

- Move rocker switch to position **II**.
  - ⇨ The symbol 1 appears in the display.

⇨ Direction of travel forward is switched on.

- Move switch to position **II**.
  - ⇨ The symbol 2 appears in the display.
  - ⇨ A warning tone sounds.

⇨ Direction of travel backward is switched on.

6.3.4 Route warning device

Audible reverse travel warning device

A warning tone sounds when the “reverse” drive direction is switched on. The sound is intended to warn people in the vicinity of the vehicle.

6.3.5 Accelerating the vehicle with pedal



⚠ CAUTION

Risk of accident through malfunctions of the accelerator pedal!

Dirt accumulation and objects in the area of the accelerator pedal can result in malfunctions and accidents.

► Do not place any loose objects in the cab.

► Keep cab clean.

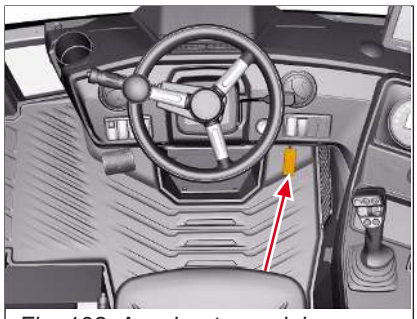

Fig. 102: Accelerator pedal

The pedal controls the engine speed variably. The engine speed affects the following functions:

- The working movements of the loader unit
- the working movements of the attachment
- the hydraulic functions of the attachment
- the traction and thrust
- the driving speed

The stronger the pedal is pressed, the more the engine speed increases.

The attainable speed depends on the selected pace.

6.3.6 Braking, stopping and parking the vehicle

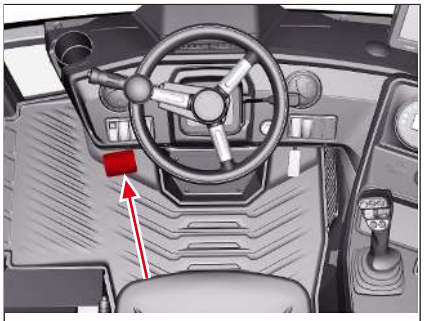

Fig. 103: Brake pedal

1. Take your foot off the accelerator pedal.
   ⇨ Driving speed of the vehicle is reduced.
2. Actuate the pedal beyond the resistance.
   ⇨ The vehicle brakes.
3. Press the pedal more.
   ⇨ The vehicle stops.
4. Set the switch for the drive direction zero position.
   ⇨ Traveling drive is in neutral position.
5. Activate parking brake.
   ⇨ Parking brake indicator light lights up in the display.

⇨ The parking brake is activated.

6.3.7 Accelerating vehicle with manual throttle

⚠ WARNING

Risk of accident due to increased engine speed!

When the direction switch is actuated and the engine speed is increased, the vehicle starts moving immediately when the parking brake is released.

- ► Before starting the engine, check the manual throttle lever and pull it back completely (**II**).
- ► After finishing work with increased engine speed, pull the lever of the manual throttle completely back (**II**).
- ► For loading and maneuvering work, pull the manual throttle lever back completely (**II**).

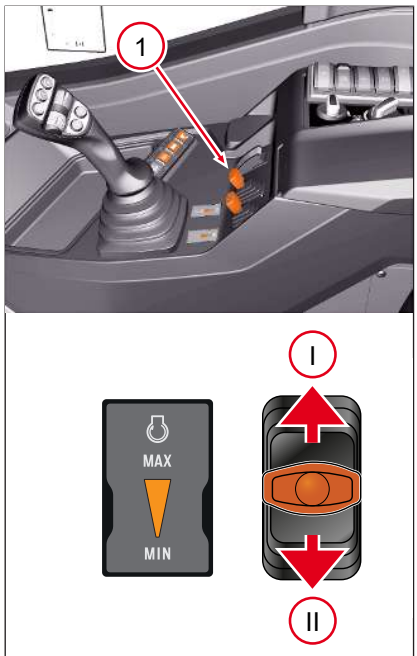

Fig. 104: Accelerating vehicle with manual throttle

With the manual throttle function, the engine speed can be infinitely adjusted without having to press the accelerator pedal. This function is useful when working with hydraulically driven attachments that require a constant oil flow rate. In this case, the speed of the vehicle can be controlled with the brake/inching pedal without changing the oil flow rate at the attachment.

The manual throttle is operated with lever **1**.

✓ Lever is in position **II**.

1. Move the lever in direction **I**.
   ⇨ The speed of the engine increases.
2. Move the lever in direction **II**.
   ⇨ The speed of the engine decreases.

6.3.8 Operating the speed limiter

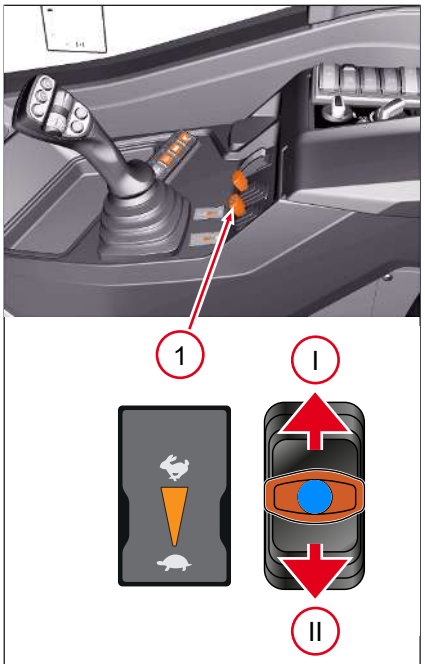

Fig. 105: Speed limiter lever

With the speed limiter function, the driving speed can be individually and continuously adjusted. The speed limiter function allows you to drive very slowly, even at high engine speed, without constantly pressing the brake/ inching pedal.

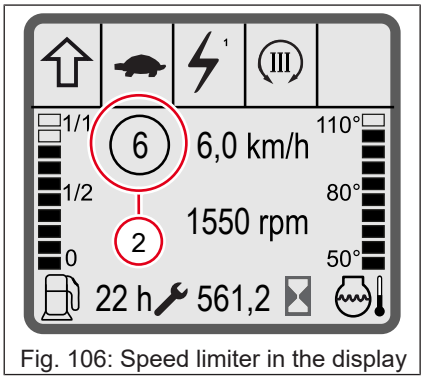

Fig. 106: Speed limiter in the display

Setting the speed

The speed limiter is operated with lever **1**. The adjusted maximum speed is shown in the display at pos. **2**.

✓ Engine runs.

1. Select a travel direction.
2. Move lever out of position **II** and back in position **II**.
3. Move the lever in direction **I**.
   ⇨ Maximum speed is increased.
4. Move the lever in direction **II**.
   ⇨ Maximum speed is reduced.

⇨ Speed is set.

6.3.9 Driving mode

The vehicle has an electronically controlled drive system, whereby different driving modes can be selected. This facilitates the operator's work with the vehicle because they can select the driving mode that is most compatible with the work to be performed.

The following options can be selected:

- AUTO mode
- ECO mode
- M-Drive mode
- Attachment mode

For some driving modes the functions manual throttle and speed limiter are required.

6.3.9.1 Description of driving modes



Fig. 107: Switch for AUTO mode

AUTO mode

AUTO mode is suitable for all work.

The vehicle can be accelerated using the accelerator pedal. The manual throttle and the speed limiter can be used if the vehicle is equipped with them.



Fig. 108: Switch for ECO mode

Eco mode

In ECO mode, the engine speed is automatically reduced when less power is required. This can reduce fuel consumption and exhaust and noise emissions. The ECO mode is suitable for light work (e.g. stacking of light unit loads) and journeys for material transport and road travel.

The vehicle can be accelerated using the accelerator pedal. The manual throttle and the speed limiter can be used if the vehicle is equipped with them.

Information

Optional driving modes

In addition to AUTO mode and ECO mode, the vehicle can optionally be equipped with either attachment mode or M-Drive mode. Both options at the same time are not possible.



Fig. 109: Switch for M-Drive mode

M-Drive mode

This M-Drive mode makes it easier for the operator to carry out loading work, e.g. when loading a trailer with bulk material from a pile.

M-Drive Mode can only be used if the vehicle is equipped with manual throttle.


Fig. 110: Switch for Attachments mode

Option attachment mode

The attachment mode facilitates the operator's work with attachments which have a hydraulic oil engine that must be supplied with a continuous oil flow, e.g. mulchers. With the attachment mode, speeds can be infinitely adjusted very finely.

The attachment mode can only be used if the vehicle is equipped with manual throttle and speed limiter.

6.3.9.2 Selecting operating mode

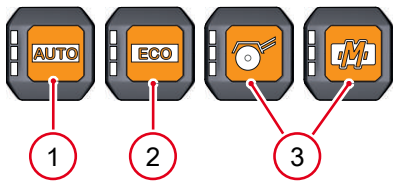

Fig. 111: Switch for overload shut-down

✓ The driving direction switch is in the neutral position.

▪ Start the engine.

⇨ LED in switch of last selected operating mode illuminates.

⇨ The last selected operating mode is activated.

▪ Press switch **1**.

⇨ The LED in the switch illuminates.

⇨ The AUTO mode is switched on.

▪ Press switch **2**.

⇨ The LED in the switch illuminates.

⇨ The ECO mode is switched on.

▪ Press switch **3**.

⇨ The LED in the switch illuminates.

⇨ Attachment mode or M-drive mode is switched on

6.3.9.3 Driving a vehicle with M-Drive

The M-Drive option is only possible in combination with the manual throttle adjustment option. With the M-Drive, the full power of the working hydraulics is available even at low speeds during travel.

The M-Drive option changes the function of pedal **2**. The engine speed is not controlled with pedal **2**, but infinitely variable with control lever **3**.



Fig. 112: Switch in the keypad for M-Drive

ActivateM-Drive

The M-Drive function is activated via the keypad in the side console.

▪ Press the switch in the keypad.

⇨ The LED in the switch illuminates.

⇨ M-Drive is activated

▪ Select a different driving mode, e.g. AUTO.

⇨ The LED in the switch goes out.

⇨ M-Drive LED in the switch goes out.

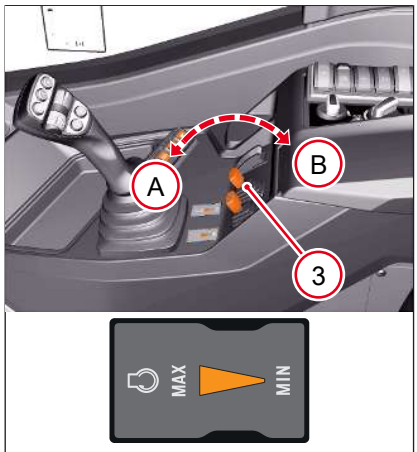

Fig. 113: Setting the engine speed

Adjusting the engine speed

- Move the control lever **3** in direction **A**.

⇨ Engine speed increases.

- Move the control lever **3** in direction **B**.

⇨ Engine speed is decreases.

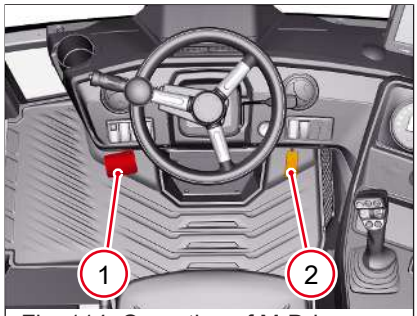

Fig. 114: Operation of M-Drive

Driving with M-Drive

Press pedal **2** to drive. The more pedal **2** is depressed, the higher the driving speed.

1. Select speed range.
2. Set the desired speed of the engine with the control lever **3**.
3. Release parking brake.
4. Press pedal **2** to drive.
   ⇨ The vehicle starts driving.
5. To stop, release pedal **2**, remove foot from pedal **2**.
   ⇨ The vehicle slows down and stops.
   ⇨ To stop the vehicle, the function of the brake inching pedal **1** is additionally available.
6. Apply the parking brake.

6.3.9.4 Operating the vehicle in attachment mode



⚠ WARNING

Risk of accident with the drive direction switch!

If the drive direction switch is switched to the zero position in attachment mode and reactivated or the drive direction is changed, the speed setting remains unchanged. This may result in accidents that could result in serious injury or death.

- ► Do not change the drive direction while driving.
- ► First stop the vehicle completely, then select the drive direction.
- ► Before activating a drive direction, step on the brake/inching pedal.

Requirements for switching on the attachment mode:

- ✓ Attachment is coupled.
- ✓ Hydraulic connections are coupled.
- ✓ Manual throttle lever is at **min**.
- ✓ The speed limiter lever is set to .
- ✓ Drive direction switch is in zero position.
- ✓ Vehicle engine is running.

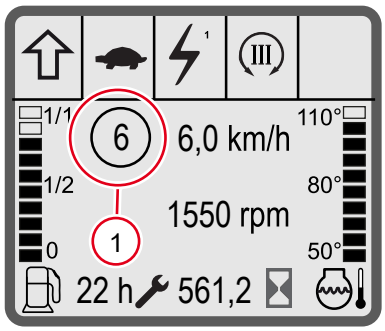

Fig. 115: Adjusted speed indicated in display.

1. Switch on the attachment mode.
2. Select a travel direction.
3. Activate continuous operation of the hydraulic connections (or High Flow).
4. Set the desired rotational speed of the engine with the manual throttle lever.
   - ⇨ The hydraulic oil engine of the attachment is at the desired rotational speed.
5. Set the desired speed with the lever of the speed limiter.
   - ⇨ A maximum speed of 10 km/hr can be set.
   - ⇨ The adjusted speed is shown in the display at pos. **1**.

⇨ Vehicle can be operated in attachment mode.

The adjusted speed and rpm can be changed during operation.

In attachment work mode, the vehicle can be accelerated using the accelerator pedal. Stopping is also possible in attachment mode by actuating the brake/inching pedal.

If the drive direction switch is switched to the zero position and reactivated or the drive direction is changed, the speed setting remains unchanged.

Exiting the attachment mode

1. Set the travel direction switch to the zero position.
2. Reset manual throttle lever to **min**
3. Set the speed limiter lever to .
4. Selecting different operating mode.

6.3.10 Securing the vehicle

The following activities apply to parking the vehicle after daily use.

- Park the vehicle on a stable, level and dry surface.
- Retract loader unit completely.
- Lower the loader unit completely to the ground.
- Move all switches and levers to zero position.
- Activate parking brake.
- Switch off the engine.
- Depressurize the hydraulic system.
- Secure the vehicle with a wheel chock.
- Conduct visual inspection for leak-tightness, leakage, and damage to the vehicle.
- Secure the vehicle against unauthorized use.
  - Remove the starting key.
  - Close the windows.
  - Lock the vehicle and all the locks.

6.3.11 Vehicle travel on public roads

Before starting to drive, ensure that the vehicle has a valid type-approval or registration. The operator must have driving license necessary for driving the vehicle on public roads.

Follow the instructions below when driving on public roads.

1. Remove the attachments not approved for use on public roads.
2. Secure attachments approved for use on public roads:
   ⇨ Empty the bucket and attach tooth protection bar.
   ⇨ Fold up and secure the foldable pallet fork.
3. Bring the loader unit to in transport position (approx. 200 mm above the ground).
4. Check the lighting system and, if necessary, rotating beacon function.
5. Check and if necessary adjust the rear view mirrors.
6. Remove the protective screen on the cab as required.
7. Close cab door and window.
8. Switch off the work lights.
9. Switch on load unit stabilizer if required.
10. Lock the loader unit.
11. Fasten the seat belt.
12. Start vehicle travel ensuring safety.

6.4 Driving with a trailer

6.4.1 Safety instructions for trailer operation

Observe the safety instructions in the chapter see Trailer operation on page 26.

In addition, the following safety instructions apply:

- Trailer operation is only permitted with a type-approved, authorized trailer coupling.
- Trailer operation with the towing gear of the vehicle is prohibited.
- Observe the maximum permissible drawbar load and trailer load.
- While operating the trailer the operating behavior of the vehicle changes. The operator must be familiar with this change and act accordingly.
- Before downhill vehicle travel, reduce driving speed or adapt it to the circumstances.
- Depending on the trailer load, there is a risk that the front axle may lift off the ground while driving.
  - Drive carefully on inclines.
  - If necessary, ballast the front axle up to the permissible axle load.

6.4.2 Requirements for driving with a trailer

Trailer operation is only allowed with a model-approved trailer coupling. Only trailers with agricultural or forestry consumables or with the vehicle's attachments may be transported on public roads.

The transport of other trailers or goods is only permitted with tractor registration. Refer to the operation license for the specific requirements on trailer operation.

The relevant national regulations must be observed and applied.

6.4.3 Trailer couplings



⚠ WARNING

Risk of injury to persons in the danger zone!

Persons in the area between vehicle and trailer may be overlooked by the operator when coupling and uncoupling and may be seriously or fatally injured.

► Ensure that there are no persons in the danger zone.

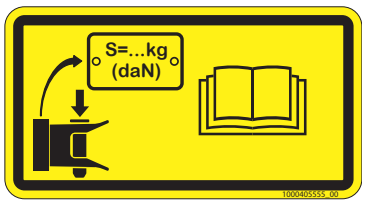

Fig. 116: Label of trailer hitch drawbar load

Drawbar load on trailer hitch

The label indicates that the maximum trailer load and support load of the trailer coupling should not be exceeded, see Trailer loads and drawbar loads on page 233.

This operator's manual describes the use and operation of the trailer couplings in the following section.

6.4.3.1 Operating the maneuvering coupling

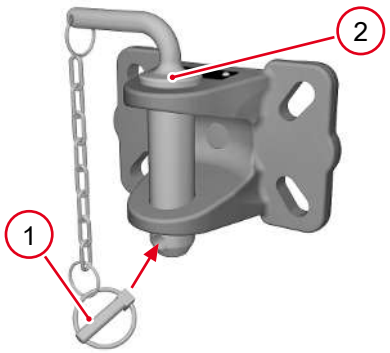

Fig. 117: Unlock the maneuvering coupling

1. Remove fuse plug **1**.
2. Pull out the bolt **2**.
3. Slowly reverse the vehicle toward the trailer drawbar.
4. Insert the pins.
5. Secure the bolt with the plug.

⇨ The trailer is coupled to the maneuvering coupling.

6.4.3.2 Automatic trailer coupling



⚠ WARNING

Danger of crushing due to unintentional actuation of the trailer coupling!

When the trailer coupling lock is actuated, the trailer pin closes abruptly. Limbs within the range of the trailer pin can be crushed and severely injured.

- ► Keep all parts of the body away from the range of action of the automatic trailer coupling.
- ► Alway keep the trailer coupling closed when it is not in use.

To ensure the prescribed swivel angle when coupled, the trailer coupling may only be used in combination with drawbar lugs in accordance with DIN 11026 (ISO 5692), DIN 74053 (ISO 1102) or DIN 74054 (ISO 8755).

The permissible towing eyes are listed on the type label on the trailer coupling.

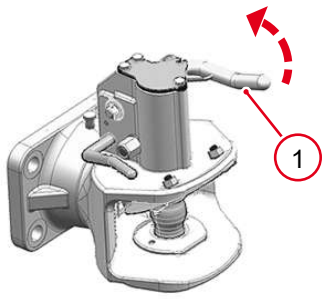

Fig. 118: Automatic trailer coupling

Hitching the trailer to the vehicle

1. Press lever **1** all the way up.
2. Adjust the trailer drawbar to the correct height.
3. Slowly reverse the vehicle toward the trailer drawbar until the drawbar eye touches and sets off the trigger mechanism.
   - ⇨ When the trigger is touched by the drawbar lug, the coupling pin quickly moves downwards.
   - ⇨ The trailer is locked in the coupling jaw.
4. Check the correct locking.
5. Connect the trailer supply lines to the vehicle.
6. Remove the equipment (e.g. chocks, support wheel) used for securing the trailer.

⇨ The trailer is coupled and connected.

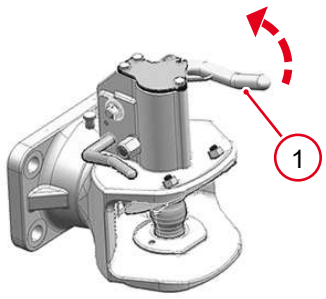

Fig. 119: Uncoupling the trailer

Uncoupling the trailer from the vehicle

1. Park the trailer on a stable, level and dry surface.
2. Apply parking brake and secure trailer (e.g. with chocks, support wheel, etc.).
3. Remove the trailer supply lines from the vehicle.
4. Press lever **1** all the way upward until the coupling pin audibly engages in the open position.
5. Slowly move the vehicle away from the trailer.
6. Close the trailer coupling by hand.

⇨ The trailer is uncoupled. The automatic trailer coupling is secured.

Close trailer coupling by hand



⚠ WARNING

Danger of crushing due to the trailer coupling pins falling down!

The sudden falling of the coupling pin can lead to injuries.

► Do not touch the coupling pin with your hands.

► Wear protective gloves.

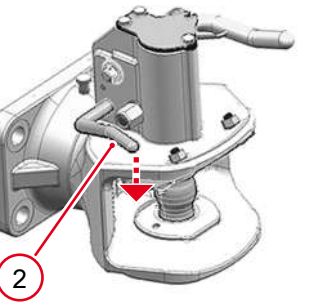

Fig. 120: Close trailer coupling by hand

The automatic trailer coupling can be closed manually without a trailer drawbar touching the trigger. The trailer coupling should always be kept closed if no trailer is coupled.

- Push lever **2** down.

⇨ The trigger is activated manually. The trailer coupling pin closes automatically.

6.5 Lighting and signaling system

6.5.1 Vehicle lights

Check lights, turn indicator lamps and horn before each journey.

The steering column switch is used to operate the lighting, turn signal indicator and signal horn functions.

6.5.1.1 Switching vehicle lights on and off

The vehicle light is switched on via switch **1**. If the switch is in position **II**, all other lighting functions are operated with the steering column switch.

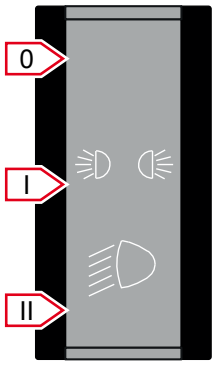

Fig. 121: Light switches

1. Move rocker switch to position **II**.
   ⇨ The parking lights are switched on.
2. Move switch to position **II**.
   ⇨ The driving lights are switched on.
3. Set switch in position **0**.
   ⇨ Lights are switched off.

6.5.1.2 Changing over between low beam and high beam


Fig. 122: Changing over low beam and high beam

- Move the steering column switch beyond the resistance downward.

⇨ High beam is switched on.

- Move the steering column switch beyond the resistance upward.

⇨ Low beam is switched on.

Move the steering column switch upwards up to resistance to actuate the headlight flasher.

6.5.1.3 Operating the turn indicator

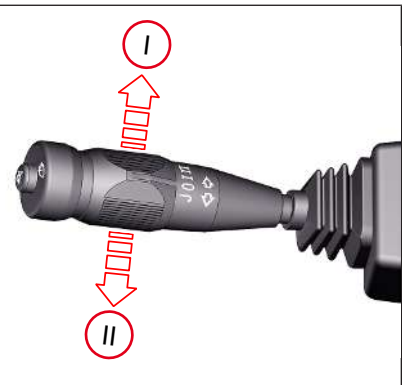

Fig. 123: Operating the turn indicator

- Move the steering column switch in direction **I**.
  ⇨ The indicator light flashes.

⇨ Turn indicator left flashes.

- Move the steering column switch in direction **I**.
  ⇨ The indicator light flashes.

⇨ Turn indicator right flashes.

6.5.1.4 Operating the hazard warning system

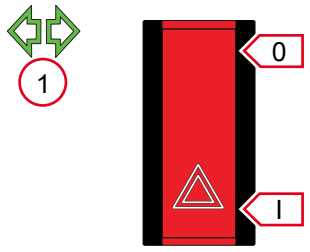

Fig. 124: Switch for hazard warning system

Item	Designation
1	Turn signal indicator light

The hazard warning system is operated with a pushbutton. The switch is located in the instrument panel and has two switch positions.

- Move rocker switch to position **II**.
  - ⇨ The indicator light flashes.

⇨ Turn signal indicators are activated on both sides.

- Set switch in position **0**.
  - ⇨ The indicator light does not flash.

⇨ Turn signal indicators are deactivated on both sides.

6.5.2 Operating the work lights



⚠ WARNING

Accident hazard due to blinded motorists!

With work lights switched on, other road users can be blinded. This may result in accidents that could result in serious injury or death.

► Switch off the work lights when driving on public roads.

► Pay attention to national regulations on construction site lighting.

6.5.2.1 Operating work light with switch

The vehicle is equipped with front and rear work lights.

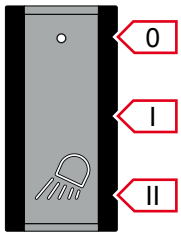

Fig. 125: Operating the front and rear work lights

Operating the work lights

- Move rocker switch to position **I**.

⇨ The front work lights are switched on.

- Move rocker switch to position **II**.

⇨ The front and rear work lights are switched on.

- Move rocker switch to position **0**.

⇨ Work lights are switched off.

6.5.3 Rotating beacon orange

The rotating beacon is attached to the mounting provided for this purpose. Use the rotating beacon only in accordance with legal regulations.

6.5.3.1 Operating rotating beacon with switch

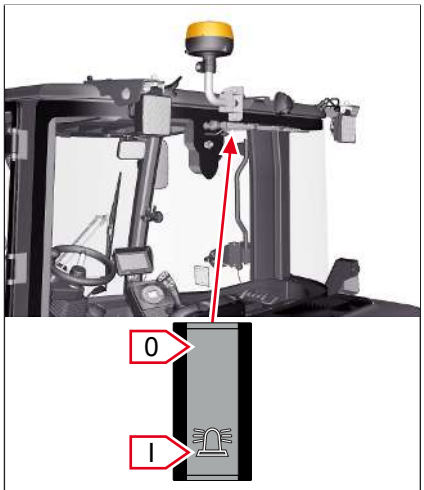

Fig. 126: Operating the rotating beacon

Operate the rotating beacon with the pushbutton shown.

- Move the switch to position **I**.

⇨ Rotating beacon is switched on.

- Set the switch to position **0**.

⇨ Rotating beacon is switched off.

6.5.4 Folding down the rotating beacon

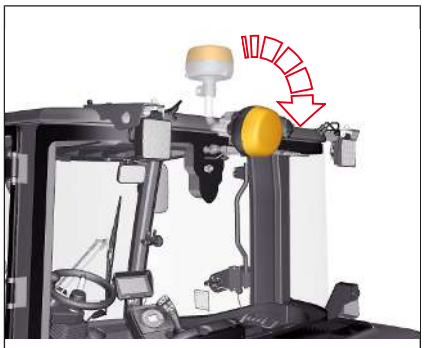
Fig. 127: Folding down the rotating beacon

The rotating beacon can be folded down for low passages.

6.5.5 Operating the cab interior light

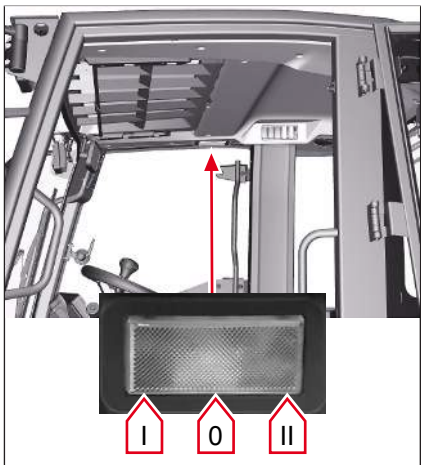

Fig. 128: Light in cab

The interior light of the cab is controlled by the interior light.

- Move the interior lamp to position **I** or **II**.

⇨ Interior light is switched on.

- Move the interior light into position **0**.

⇨ The interior light goes out.

6.5.6 Operating the signal horn



Fig. 129: Operating the horn

The horn is operated with steering column switch.

- Press the switch on the steering column switch.

⇨ The horn sounds.

- Release the switch on the steering column switch.

⇨ The horn no longer sounds.

6.6 Washer system

6.6.1 Operating the window wiper and washer system at the front

The vehicle has a window wiper and washer system for the front window.

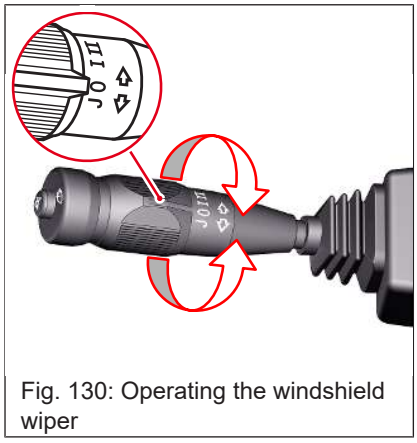

Fig. 130: Operating the windshield wiper

Operate the window wiper on the front window

The window wiper and washer system for the front window are operated by using the steering column switch.

- Turn the rotary switch on the lever forwards.

⇨ Intermittent wipe.

- Turn the rotary switch on the lever forwards to the next step.

⇨ Constant wipe.

- Turn the rotary switch on the lever back completely.

⇨ The windshield wipers return to their starting position and are then switched off.

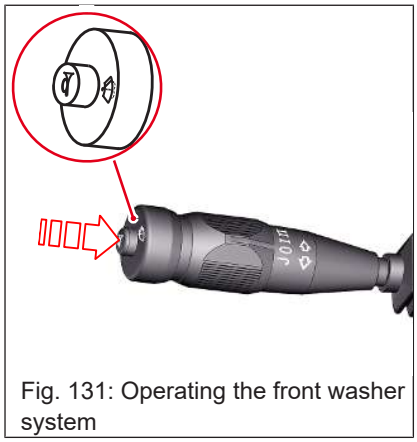

Fig. 131: Operating the front washer system

Operating the washer system on the front window

- Press and hold the switch on the lever.

⇨ The windshield washer system is switched on.

- Release the switch on the lever.

⇨ The windshield washer system is switched off.

6.6.2 Operate the rear window wiper and washer system using a switch

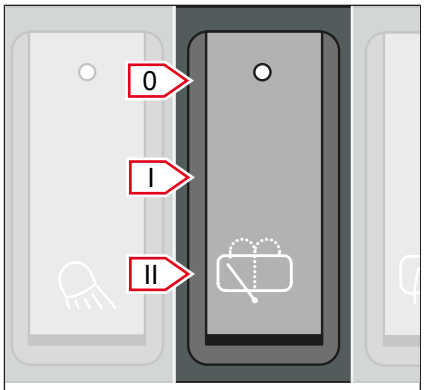

Fig. 132: Switch for the rear window wiper

The rear window wiper is operated with a switch in the switch panel in the roof of the cab. The switch has three positions.

- Move the switch to position **I**.

⇨ Rear window wiper is switched on.

- Move the switch to position **II**.

⇨ The washer system is switched on.

- Move the switch to position **0**.

⇨ The window wiper and washer system are switched off.

6.7 Heating, ventilation and air conditioning system

6.7.1 Operating heating

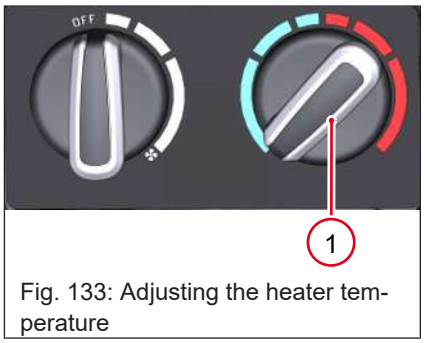

Fig. 133: Adjusting the heater temperature

The cab is equipped with a fan-assisted heating system. The temperature of the heating is controlled with the rotary switch **1**.

The temperature can be infinitely adjusted.

✓ Fan is switched on.

- Turn switch clockwise.

⇨ The temperature increases.

- Turn switch counterclockwise.

⇨ The temperature decreases.

6.7.2 Adjusting the fan and air vents

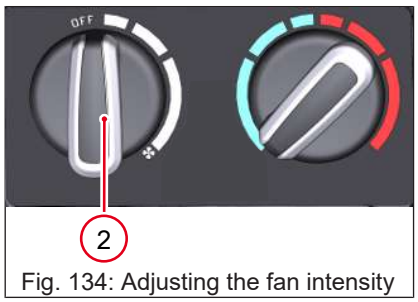

Fig. 134: Adjusting the fan intensity

Adjusting the fan

The cab is equipped with a fan-assisted heating system. The fan is operated with the rotary switch **2** in the instrument panel. Adjust the fan by turning the switch. The fan can be set to four different levels.

- Turn the fan to level 0.

⇨ Fan is switched off.

- Turn the fan to level 1.

⇨ Low ventilation

- Turn the fan to level 2.

⇨ Medium ventilation

- Turn the fan to level 3.

⇨ High ventilation

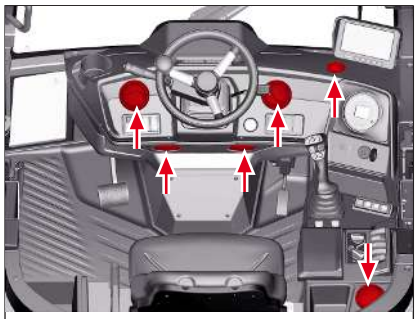

Fig. 135: Overview of air vents nozzles

Adjusting the air vents nozzles

Air flow in the cabin can be directed with the ventilation nozzles. In cold weather with warm air supply, the windows are cleared of ice and the cab is heated.

Observe the following for the ventilation nozzles:

- No liquids may get into the ventilation nozzles.
- No objects or dirt may fall into the ventilation nozzles.
- Do not cover the air vents when the heater is in operation, e.g. with clothing.

Ventilate cab

With the heating switched off, the cab can be ventilated using the fan or the side or rear window. Always lock the side and rear window in the open position.

6.7.3 Using the air conditioning system



NOTICE

Damage to the air conditioning system!

If the air conditioning system is not used for too long, malfunctions may occur.

► In order to avoid malfunctions and possible loss of refrigerant, put the air conditioning system into operation at least once a month.

Observe the following points in order to achieve optimum performance of the air conditioning system:

- In case of accumulated heat, air the cab via doors and windows before the air conditioning system is operated.
- Then close the windows and doors.
- At the outset, set the air conditioning system at the highest level and open all the nozzles, then meter it out.
- To prevent condensation from forming on the condenser, switch off the air conditioning system five minutes before the end of the journey or work.
- If the front window fogs up, set the air conditioning system nozzles towards the window.

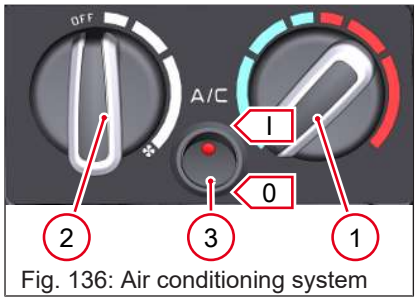

Fig. 136: Air conditioning system

Using the air conditioning system

Switch the air conditioning system on and off with rocker switch **3**. Rotary switch **2** must be at least at level 1.

1. Set switch **3** to position **I**.
   ⇨ The air conditioning system is switched on.
2. Set switch **3** to position **0**.
   ⇨ The air conditioning system is switched off.
3. The temperature can be continuously adjusted using rotary switch **1**.
4. Adjust the fan intensity in steps using rotary switch **2**.

6.8 Working with the vehicle

6.8.1 Warnings for working with the vehicle.



⚠ WARNING

Accident hazard due to persons in the risk zone!

Persons who are in the risk zone of the vehicle or suddenly enter it can be injured by working movement or the moving vehicle. This may result in accidents that could result in serious injury or death.

- ► Interrupt work immediately if persons enter the risk zone.
- ► Adjust the mirror correctly. Use visual aids such as, e.g. a camera.
- ► Observe extreme caution when reversing.

Distances to electrical overhead lines



⚠ DANGER

Danger to life if approaching electric overhead lines!

Approaching overhead electric lines causes electric arcs to form. Improper behavior in this situation will result in serious injury or death.

- ► Keep away from electrical overhead lines.
- ► Do not attempt to leave the cab in the event of electric arcs.
- ► Before working under electric overhead lines, contact the energy supplier and cause the current to be switched off.

A VDE recommendation specifies the following minimum distances to electrical overhead lines.

Rated voltage	Safety distance
Up to 1000 volts	1 m
Over 1000 volts to 110 kilovolts	3 m
Over 110 kilovolts to 220 kilovolts	4 m
Over 220 kilovolts	5 m
Unknown rated voltage	5 m

If in doubt about the rated voltage, maintain the minimum distance of five meters.

Falling objects

⚠ WARNING

Risk of injury from falling load when the loader unit is raised and extended!

Falling load (e.g. large bales or bale stacks) can lead to serious injury or death.

- ► Never lift or transport several large bales or crates at the same time.
- ► The stacking of general cargo with vehicles without a driver's protective roof or cab is prohibited.
- ► Do not step under the raised loader unit.
- ► Do not tilt the attachment up to the stop when the loader unit is raised.

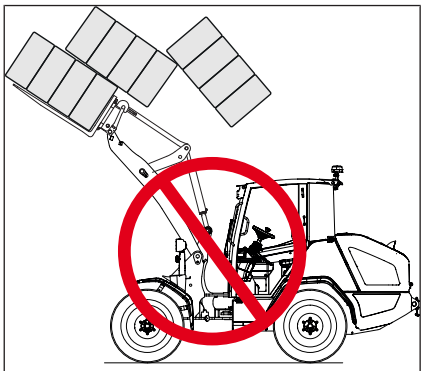

Fig. 137: Warning of falling objects.

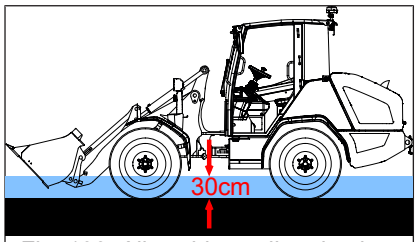

Fig. 138: Allowable wading depth

Allowable wading depth of the vehicle

The allowable wading depth of the vehicle must not be exceeded when driving through water. Driving through salt water is prohibited.

Working operation such as loading in the water is prohibited.

Observe the following when driving through flooded areas:

- Do not exceed the permitted wading depth.
- Do not drive faster than walking speed.
- Never stop, reverse or park the vehicle in the water.

Permissible tilt of vehicle

⚠ WARNING

Risk of injury due to the vehicle tipping over!

A tipping vehicle can lead to serious injury or death. There is a tipping hazard when driving on an inclined substrate.

- ► Drive on gradients/slopes only with the loader unit lowered.
- ► The vehicle's permissible tilt may NOT be exceeded when in use.
- ► The given value applies when the vehicle is not folded in.
- ► The given value applies only for longitudinal incline, not for lateral movement on slope.

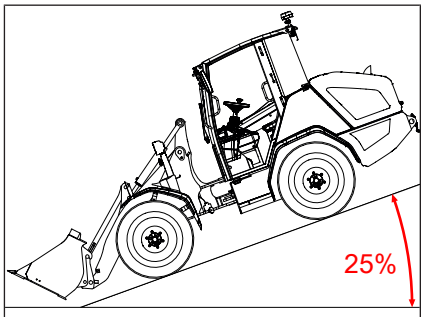

Fig. 139: Permissible inclination

6.8.2 Operating the loader unit with a joystick

The joystick controls the working movements of the loader unit. The joystick is located to the right of the seat. When control lever is released, it returns automatically to the middle position.

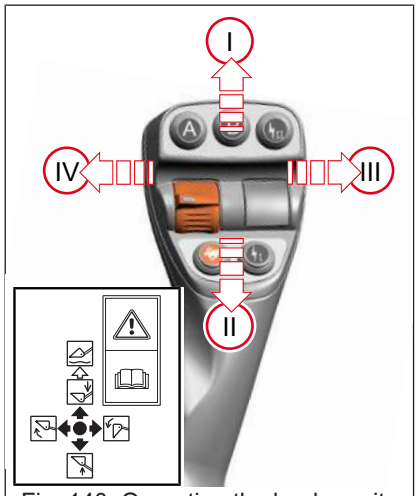

Fig. 140: Operating the loader unit with a joystick

- Move the lever in direction **I**.

⇨ The loader unit lowers itself.

- Move the lever in direction **II**.

⇨ The loader unit is raised.

- Move the lever in direction **III**.

⇨ Attachment tilts out.

- Move the lever in direction **IV**.

⇨ Attachment tilts in.

6.8.3 Using the joystick lock function



⚠ CAUTION

Risk of accident due to unintentional operation of the joystick when driving on the road!

Unintentional operation of the joystick can lead to unintentional movements of the loader unit. This can cause accidents that lead to injuries.

► Always lock the loader unit when driving on the road.

► Always lock the loader unit before leaving the vehicle.

► First take a seat on the seat, then unlock the joystick.

Operate locking function

The joystick for the loader unit can be secured against unintentional actuation with the locking function. hen the locking function is activated, it is not possible to operate the loader unit.

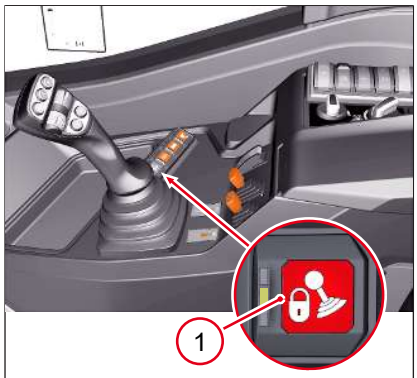

Fig. 141: Lock/unlock joystick

The lock function is operated with switch **1** on the keypad.

- Press switch.
  - ⇨ The LED in the switch illuminates.

⇨ Locking function is switched on.

- Press the switch again.
  - ⇨ The LED in the switch turns off.

⇨ Locking function is switched off.

6.8.4 Operating the differential lock



⚠ WARNING

Risk of accident due to locked differential!

An engaged differential lock can lead to accidents in curves. The differential can still be locked even though the symbol of the differential lock has disappeared from the display .

- ► Only switch on the differential lock during straight ahead vehicle travel.
- ► Ensure that the differential lock is released before driving in a curve.
- ► Turn the steering wheel slightly to the left and right, or change the travel direction to disengage the differential lock.



NOTICE

Damage to the gearbox due to locked differential!

- ► Only switch on the differential lock when the wheels are at a standstill.
- ► Only switch on the differential lock for loading work on loose or slippery ground.
- ► The symbol of the differential lock disappears from the display as soon as the switch is released. The differential may still be locked even though the symbol of the differential lock has disappeared from the display . The effect is a higher amount of force required for steering. Release the differential lock by slightly steering in both directions or by changing the driving direction.

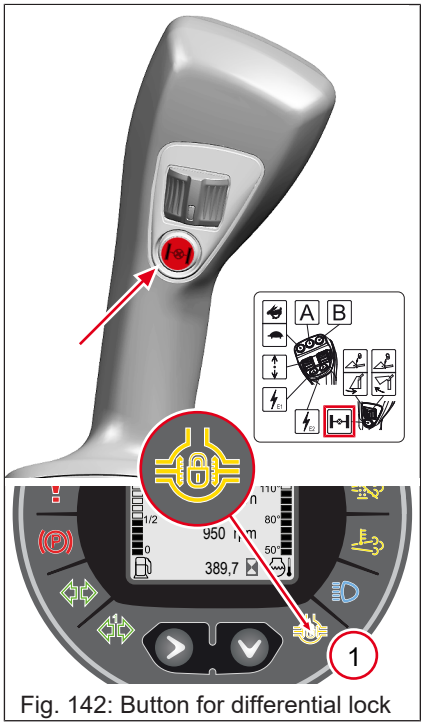

Fig. 142: Button for differential lock

Item	Designation
1	Differential lock indicator light

If necessary the differential lock can be used to lock the differential gear. The differential lock in the axles prevents the differential gear from having a compensating effect, i.e. the driving force acts uniformly on all wheels.

- Press and hold the button.
  - ⇨ Indicator light 1 lights up in the display.

⇨ The differential lock is switched on.

- Release button.
  - ⇨ Indicator light1 does not light up in the display.

⇨ The differential lock is switched off.

6.8.5 Switching on the floating position

⚠ WARNING

Injury hazard due to uncontrolled movements of the loader unit!

Sudden lowering of the loader unit can lead to a loss of control over the vehicle. This may result in accidents that could result in serious injury or death.

► Do not switch on the floating position when the loader unit is raised.

► Only switch on the floating position when the loader unit is on the ground.

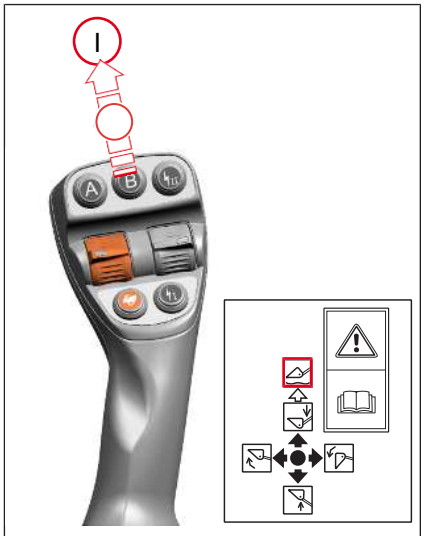

Fig. 143: Activate the floating position with the joystick

The floating position of the loader unit is located on the “Lower” function. The floating position makes it possible to remove material for leveling a surface. To do this, lower the loader unit to the ground with the cutting edge of the lightweight material /earth bucket and drive backwards over the surface to be leveled.

1. Lower the loader unit to the ground.
2. Move the joystick beyond the resistance towards **I**.
   - ⇨ The joystick engages.

⇨ The floating position is switched on.

- Move the joystick beyond the resistance back to the middle position.

⇨ The floating position is switched off.

6.8.6 Operating the load unit stabilizer

NOTICE

Danger of technical damage to the hydraulic system!

- ► Switch on loader unit stabilizer only for transportation.
- ► Switch off the loader unit stabilizer for loading work.

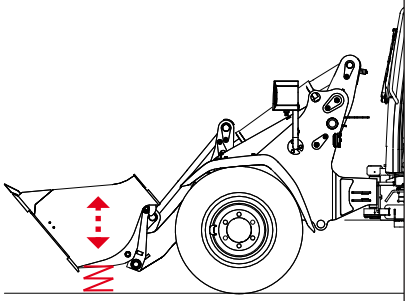

Fig. 144: Load unit stabilizer function

The loader unit stabilizer dampens shocks that are transferred from the load system to the vehicle during vehicle travel on uneven ground at higher speed. That prevents the vehicle from shaking when in motion.

Only switch on the load unit stabilizer in the transport position.

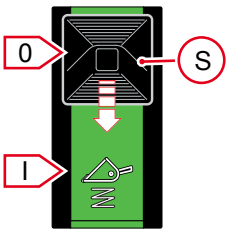

Fig. 145: Switch for load unit stabilizer

Switch on load unit stabilizer

✓ The loader unit is lowered.

1. Raise the loader unit approximately 20 cm above the ground.
2. Press lock **S** on the pushbutton in the direction of the arrow and set the switch in **I** position.
   ⇨ The load stabilizer is switched on.
3. Move the switch to position **0**.

⇨ The load stabilizer is switched off.

6.8.7 Procedure in case of failure of power supply

⚠ WARNING

Accident hazard due to uncontrolled movements of the loader unit!

If the engine fails, the loader unit is no longer supplied with hydraulic oil. This may result in accidents that could cause serious injury or death.

- ► If the power supply to the vehicle should fail, the loader unit should be lowered immediately and carefully to the ground.
- ► Depressurize individual control circuits of the working hydraulics by actuating the joystick.
- ► Risk of accident due to fallout of attachment! During emergency lowering, do not operate the control wheel for the third control circuit when the switch for unlocking the hydraulic locking mechanism is pressed.

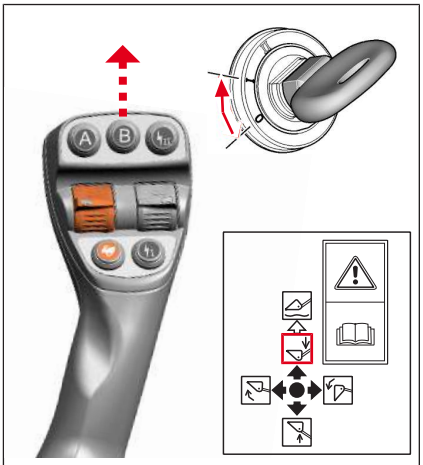

Fig. 146: Operate emergency lowering

✓ Operator sits on the seat.

1. Move starting key to position **I**.
   ⇨ Warning lights and indicator lights illuminate.
2. Lower the loader unit with the joystick using the lower function.

⇨ The loader unit lowers to the ground.

If the loader unit does not lower, proceed as follows:

1. Apply the parking brake.
2. Move all control levers, buttons and switches to zero position.
3. Switch on the hazard warning system.
4. Secure the vehicle against rolling away with wheel chocks.
5. Block off a large area around the vehicle using ropes, tapes or warning tape.
6. Keep people from entering this area.
7. Immediately contact an authorized service center to repair the vehicle.

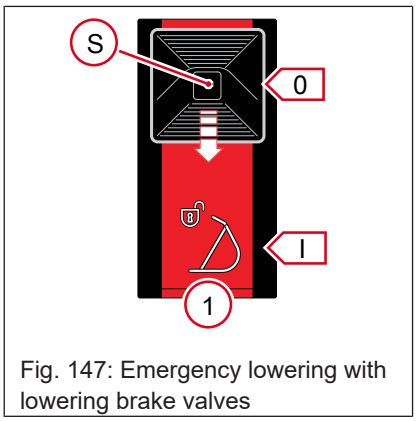

Fig. 147: Emergency lowering with lowering brake valves

Vehicle with electrically unlockable lowering brake valves

If the vehicle is equipped with electrically unlockable lowering brake valves, the switch must first be set to position **I**.

✓ Operator sits on the seat.

1. Move starting key to position **I**.
   ⇨ The control lights illuminate.
2. Press lock **S** on the switch **1** in the direction of the arrow and move switch to position **I**.
3. Lower the loader unit with the joystick using the lower function.

⇨ The loader unit lowers to the ground.

Reduce residual pressure in the hydraulic system



⚠ WARNING

Risk of injury due to pressure!

A fine jet of hydraulic oil under high pressure can penetrate through the skin. This can cause serious injury.

- ► Seek medical attention immediately if hydraulic oil penetrates the skin or eyes.
- ► Only open hydraulic systems after the pressure in them has been released.
- ► Wear protective gloves and safety glasses.

If a hydraulic system is to be opened immediately after stopping the vehicle, the hydraulic system must first be depressurized. The loader unit can be operated during a limited period of time in case of engine malfunction.

The loader unit must be lowered immediately after the power failure has been detected. Reduce residual pressure in the hydraulic system as follows.

1. Lower the loader unit completely to the ground.
2. Switch off the engine.
3. Move the joystick several times in all directions. Move all hydraulic system switches to zero position.
4. Unload the tank for the hydraulic oil by opening the fill opening.

⇨ The pressure in all hydraulic systems is released.

6.8.8 Coupling attachments



⚠ WARNING

Risk of accident due to incorrect or damaged attachments!

Incorrect or damaged attachment can cause accidents, which can lead to serious injuries or death.

- ► Do not use attachments that are not approved.
- ► Use only approved attachments.
- ► Do not use damaged attachments.
- ► Before starting work, always check the attachments for damage, correct locking and firm installation.
- ► Do not work with a damaged attachment mount or lock.



⚠ WARNING

Risk of accident due to unintentional release of the attachment lock!

The locking of incorrectly locked attachments can disengage unintentionally. This may result in accidents that could result in serious injury or death.

- ► Always check for correct locking after attaching attachments.

NOTICE

Damage due to incorrect attachments.

Attachments that are too heavy or large can overload the loader unit and could thus result in damage.

- ► To prevent damage to the vehicle, only use attachments approved by the vehicle manufacturer.
- ► If you have any questions relating to attachments, contact an authorized service center.

Only attachments approved by the vehicle manufacturer may be used. The vehicle manufacturer accepts no liability for the use of non-approved attachments.

If new hydraulic hose lines have to be laid for an attachment, contact an authorized service center. Only an authorized service center is allowed to install new hydraulic hoses.

6.8.8.1 Coupling the attachment with the hydraulic power coupler

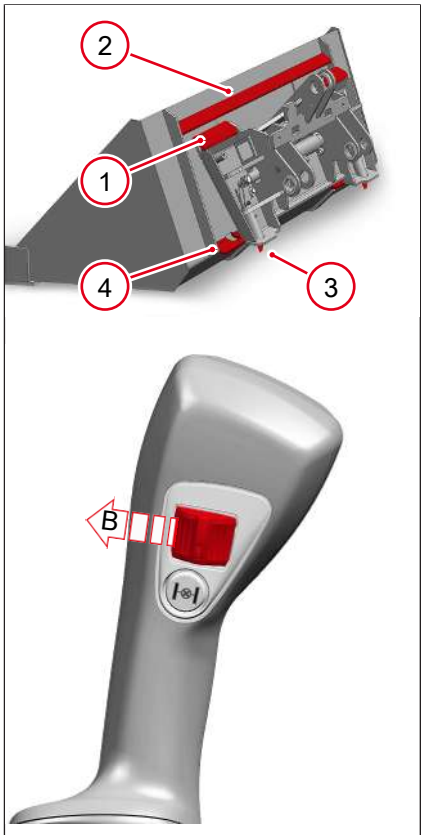

Fig. 148: Coupling and locking attachments

✓ The locking pins **3** must be fully retracted so that an attachment can be coupled.

1. Lower the loader unit.
2. Driving towards the attachment.
3. Place the mounting plates **1** under the mount **2**.
4. Lift the loader unit and tilt in the attachment.
5. Move switch on joystick in the direction .
   ⇨ Locking pin **3** moves into the retaining straps **4**.

⇨ Attachment is locked.

Check for correct locking

Both mounting plates **1** must be anchored in the provided mounts **2**. Both lock pins **3** must be visible in the bores **4** provided on the retaining straps on the attachment.

6.8.9 Releasing the pressure from the hydraulic connections

To couple the hydraulic connections of the attachments, the hydraulic connections on the loader unit must be depressurized.

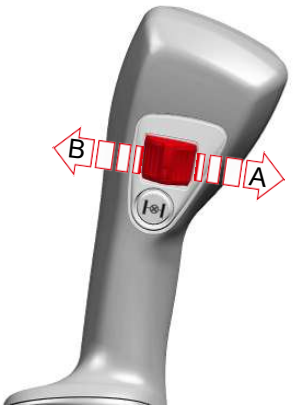

Fig. 149: Pressure relief with scroll wheel

Release hydraulic connections with the switch on the joystick

1. Stop the engine of the vehicle.
2. Switch ignition of the vehicle to position **I**.
3. Move the switch on the joystick repeatedly in either direction.

⇨ The hydraulic connections are depressurized.

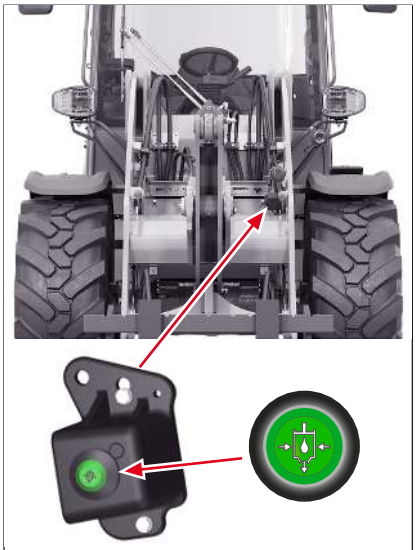
Fig. 150: Pressure relief with switch on the loader unit

Depressurizing the hydraulic connections by using the switch on the loader unit

In addition, the vehicle can be equipped with a pushbutton on the loader unit, which can also be used to depressurize the hydraulic connections.

With this option it is not necessary to switch off the vehicle's engine.

✓ Attachment is attached and securely locked.

1. Stop the vehicle.
2. Lower the load system.
3. Activate parking brake.
   ⇨ Hydraulic drives are deactivated.
4. Get out and hold the button down for about 5 seconds.

⇨ The hydraulic connections are depressurized.

If the 4th control circuit should be depressurized, first, the 4th control circuit should be selected in the cab.

6.8.10 Coupling and uncoupling the hydraulic connections



⚠ WARNING

Risk of injury due to pressure!

A fine jet of hydraulic oil under high pressure can penetrate through the skin. This can cause serious injury.

- ► Seek medical attention immediately if hydraulic oil penetrates the skin or eyes.
- ► Only open hydraulic systems after the pressure in them has been released.
- ► Wear protective gloves and safety glasses.

NOTICE

Soiled hydraulic connections can cause dirt to penetrate into the hydraulic system and cause damage!

- ► Clean hydraulic connections before connecting or disconnecting.
- ► Seal unused hydraulic connections with protective caps.
- ► Replace missing protective caps.

Environment

Hydraulic oil is harmful to the environment!

When coupling and uncoupling the hydraulic connections, hydraulic oil may leak.

- ► Avoid releasing it into the environment.
- ► When coupling and uncoupling, hold the tank under the hydraulic connections to catch any leaking hydraulic oil.
- ► Dispose of leaked hydraulic oil in an environmentally friendly manner.

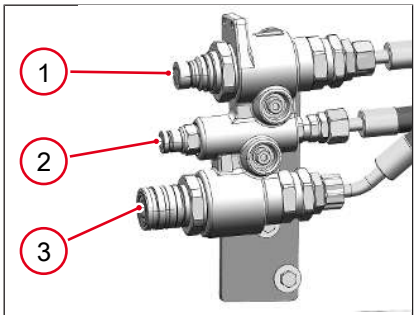

Fig. 151: Coupling hydraulic connections

Coupling hydraulic connections

Item	Designation
1	Hydraulic connection – Forward travel
2	Hydraulic connection – Oil leak
3	Hydraulic connection - Reverse travel

In order to use hydraulically actuated attachments, the attachment's hydraulic connections must be coupled with the hydraulic connections of the vehicle.

✓ The attachment is coupled with the loader unit and securely locked.

✓ The hydraulic connections are depressurized.

1. Remove the protective caps from the hydraulic connections on the attachments and loader unit.
2. Push in the hydraulic connections from the attachment into the opening of the hydraulic connections of the loader unit.
3. To check whether the hydraulic connections are correctly engaged, gently pull the hydraulic hoses from the attachment.
   ⇨ Ensure that the hydraulic connections do NOT come loose.
4. Check that the attachment's hydraulic system and the hydraulic connections do not leak.

⇨ Hydraulic connections are coupled.

The hydraulic connections are designed in such a way that they cannot be interchanged.

A leakage oil line is required for certain attachments on which components are driven by hydraulic oil engines. Connection 2 is the leakage oil line.

For working with hydraulically actuated attachments, see Operating standard hydraulic connections on page 136

Uncoupling the hydraulic connections

✓ The hydraulic connections are depressurized.

1. Place a tray under the hydraulic connections to catch any hydraulic oil leakage.
2. Press the hydraulic connections on the loader unit forward.
3. Simultaneously pull at the hydraulic hose of the attachment.
   ⇨ The hydraulic connections are detached.
4. Put the protective caps onto the hydraulic connections.
5. Place the hydraulic lines over the attachment.

⇨ The attachment can be uncoupled.

6.8.11 Uncoupling attachments



⚠ CAUTION

Injuries due to tipping over of removed attachments!

Attachments that tip over can cause injury to persons.

- ► Ensure that no one is in the danger zone.
- ► Only park the attachments on firm and level ground.
- ► Close attachments with moving parts (e.g. grab bucket).
- ► Ensure the safe and stable position of the attachment, if necessary use supports provided for this purpose.

6.8.11.1 Uncoupling the attachment with hydraulic quick hitch system

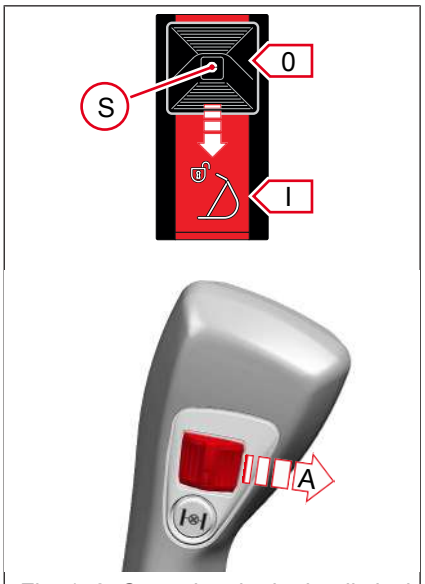

Fig. 152: Operating the hydraulic lock

The hydraulic lock is enabled with the switch. The switch is located in the switch panel in the instrument panel. The switch has two switch positions.

✓ Lower the attachment only to firm, level ground and secure it to prevent it from tipping over or rolling away.

1. Lower the loader unit.
2. Move switch to position **I** and hold.
3. Move the control wheel on the joystick in direction **A**.
   ⇨ The lock pins are retracted.
4. Lower the loader unit and tilt out the attachment.
   ⇨ The pins are released from the catch hooks.

⇨ The attachment is uncoupled.

6.9 Operating the front hydraulic connections

6.9.1 Hydraulic connections on the loader unit

NOTICE

Soiled hydraulic connections can cause dirt to penetrate into the hydraulic system and cause damage!

- ► Clean hydraulic connections before connecting or disconnecting.
- ► Seal unused hydraulic connections with protective caps.
- ► Replace missing protective caps.

The vehicle is equipped as standard with hydraulic connections of the third control circuit on the loader unit. The hydraulic hoses of attachment with hydraulic functions can be coupled to these hydraulic connections.

As an option, the following hydraulic connections can be installed on the loader unit:

- Hydraulic connections Unpressurized return flow, leak oil line

6.9.2 Operating standard hydraulic connections

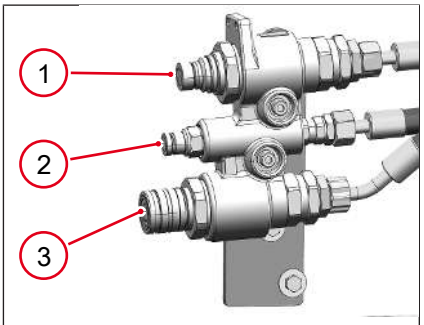

Fig. 153: Position of the hydraulic connections.

Item	Designation
1	Hydraulic connection – Forward travel
2	Hydraulic connection – Oil leak
3	Hydraulic connection - Reverse travel

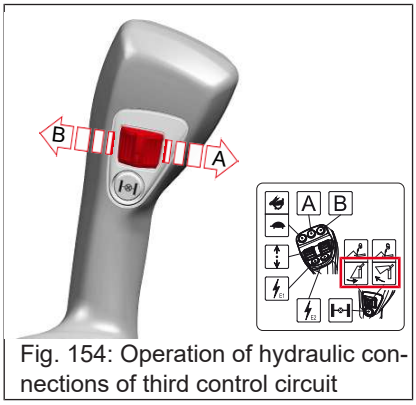

Fig. 154: Operation of hydraulic connections of third control circuit

Operation of hydraulic connections with the control wheel

The hydraulic connections on the loader unit can be operated with the control wheel on the joystick. The control wheel automatically returns to its zero position as soon as it is released.

- Move the control wheel on the joystick in direction **A**.

⇨ Hydraulic connection **A** is the pressure side, hydraulic connection **B** is the return line.

- Move the control wheel on the joystick in direction **B**.

⇨ Hydraulic connection **A** is the return line, hydraulic connection **B** is the pressure side.

6.9.3 Standard hydraulic connections in continuous operation

NOTICE

Damage due to overheating of the hydraulic system!

When continuous operation is switched on and no attachment is connected, the hydraulic system overheats very quickly.

► Always bring the switch for continuous operation to the zero position when continuous operation is not required.

With this function the hydraulic connections can be operated in continuous operation. This function is necessary for certain attachments that have a hydraulic oil engine that must be supplied with a continuous flow of oil, e.g. sweeper.

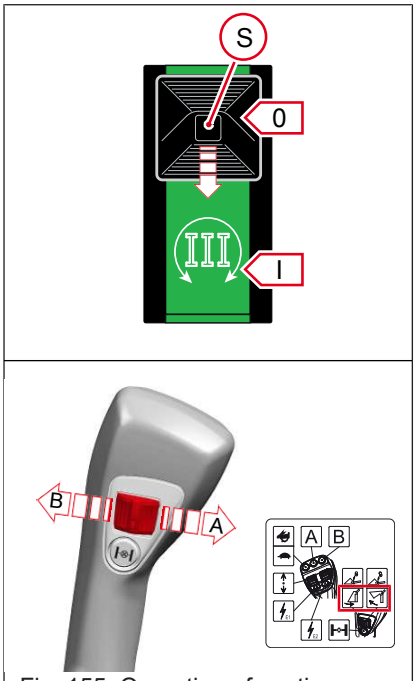

Fig. 155: Operation of continuous operation third control circuit

Continuous operation of the hydraulic connections by operating the control wheel

1. Press lock **S** in switch downwards and move switch to position **I**.
   ⇨ Continuous operation function is activated.
   ⇨ The symbol flashes on the display.
2. Move the control wheel in direction **A** and release it.
   ⇨ The symbol illuminates on the display.

⇨ Continuous operation is switched on. Hydraulic connection **A** is pressure side, hydraulic connection **B** is return flow.

If necessary, the continuous operation of the hydraulic connections can also be switched to the right-hand hydraulic connection.

1. Press lock **S** in switch downwards and move switch to position **I**.
   ⇨ Continuous operation function is activated.
   ⇨ The symbol flashes on the display.
2. Move the scroll wheel in direction **B** and release it.
   ⇨ The symbol illuminates on the display.

⇨ Continuous operation is switched on. Hydraulic connection **A** is return, hydraulic connection **B** is pressure side.

Switch off continuous operation of hydraulic connections

If continuous operation is to be interrupted only briefly, proceed as follows:

✓ Continuous operation is activated.

1. Leave switch in position **I**.
2. Move the scroll wheel in any direction and release.
   ⇨ The symbol flashes on the display.

⇨ Continuous operation is disabled.

- Move the scroll wheel again in any direction.
  ⇨ The symbol illuminates on the display.

⇨ Continuous operation is enabled again.

Switch off continuous operation of hydraulic connections

If continuous operation is no longer required, proceed as follows:

- Press the switch again.
  - ⇨ The symbol on the display disappears.

⇨ Continuous operation function is disabled.

6.9.4 Hydraulic connections Unpressurized return flow, leak oil line



NOTICE

Technical damage to hydraulic components of attachments!

Excessive oil flow in the leakage oil line can lead to technical damage to hydraulic oil engines.

- ► Only connect leakage oil lines from attachments.
- ► Do not connect any hydraulic connections that lead to larger oil volumes.
- ► Changes to the hydraulic connections, e.g. from replacing couplings, are not allowed.

The hydraulic connections for unpressurized return flow and leakage oil line are located on the loader unit. The hydraulic connections are designed such that it is not possible to confuse them with other hydraulic connections.

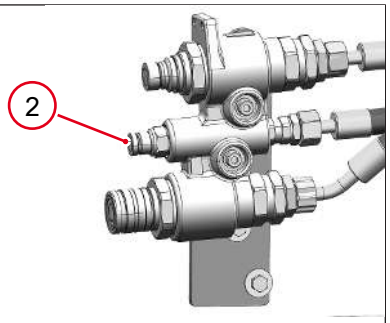

Fig. 156: Unpressurized return flow, leak oil line

Leak oil line

A leakage oil line is required for certain attachments on which components are driven by a hydraulic oil engine. This connection returns the leakage oil from the hydraulic oil engine of an attachment directly to the hydraulic oil tank of the vehicle. The connection for the leakage oil line is located at the front of the loader unit at position **2**.

Unpressurized return flow, leak oil line do not have to be depressurized for coupling and uncoupling.

6.10 Operating the rear hydraulic connections

6.10.1 Operating the rear hydraulic connections



NOTICE

Soiled hydraulic connections can cause dirt to penetrate into the hydraulic system and cause damage!

- ► Clean hydraulic connections before connecting or disconnecting.
- ► Seal unused hydraulic connections with protective caps.
- ► Replace missing protective caps.



Fig. 157: Rear hydraulic connections

Item	Designation
1	Tipper truck connection at the rear

Some attachments installed at the rear of the vehicle require hydraulic connections at the rear of the vehicle.

Coupling and uncoupling the hydraulic connections at the rear

To couple and uncouple the hydraulic connections at the rear, they must first be depressurized: see Releasing the pressure from the hydraulic connections on page 132.

6.10.2 Operating tipper connection at the rear via switch-over function

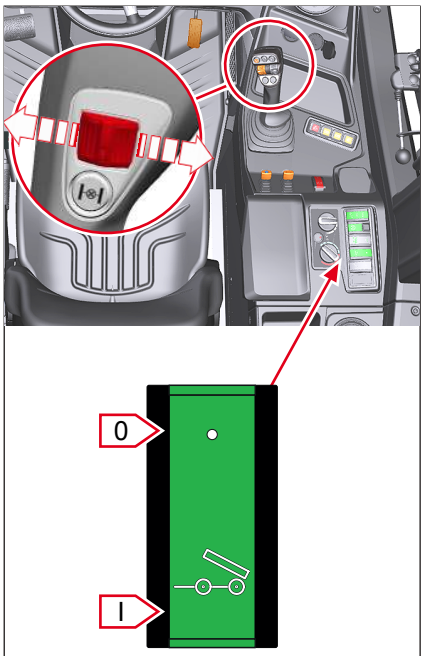

Fig. 158: Switch for tipper connection

The vehicle can be optionally equipped with a switch-over function. The switch-over function enables the rear hydraulic connections rear to be operated via the scroll wheel for the third control circuit on the joystick.

The hydraulic connections on the loader unit and the rear hydraulic connections cannot be operated at the same time for this function.

The function is switched via the button on the switch panel in the side console. The switch has two switch positions.

- Move the switch to position **I**.

⇨ Tipper connection at the rear can be operated with the scroll wheel on the joystick.

- Move the switch to position **0**.

⇨ Hydraulic connections on the loader unit can be operated with the scroll wheel on the joystick.

6.11 Operating electrical functions

6.11.1 14-pin plug receptacle at the loader unit

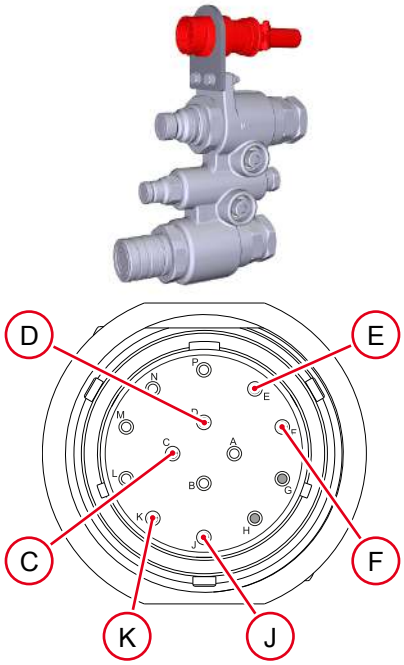

Fig. 159: 14-pin socket

The 14-pin plug receptacle on the load system is used for connecting attachments that have electrically operated functions.

In the case of this option, a 14-pin plug receptacle is on the load system and a 3-pin plug receptacle is installed at the rear. The 3-pin plug receptacle is energized when the electrical function – Pin **J** is energized at the 14-pin plug receptacle.

With the 14-pin plug receptacle option on the load system, the joystick for the load system is equipped with advanced functions.



Fig. 160: Control elements for 14-pin plug receptacle

Control elements for 14-pin plug receptacle

The 14-pin plug receptacle is operated using the rocker switch **1** in the switch console and different control buttons on the joystick:

1 Rocker switch for 14-pin plug receptacle

- Switching on the electrical function of 14-pin plug receptacle

2 Button Ⓐ (Pushbutton function)

- Actuating the electrical functions

3 Button Ⓑ (Pushbutton function)

- Actuating the electrical functions

4 Button (Continuous function)

- Actuating the electrical functions

5 Button (Toggle function)

- Switching between various electrical functions

6 Symbol on the display

- Monitoring electrical functions

Operating 14-pin plug receptacle

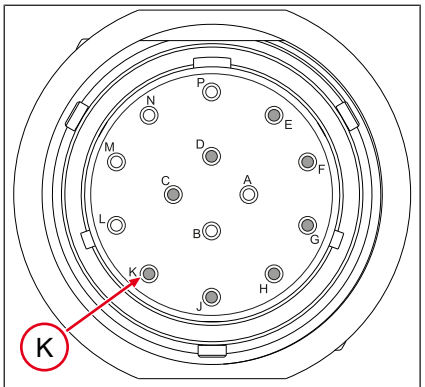

Fig. 161: Socket 14 pin - Pin K

If the rocker switch **1** is moved to position **I**, Pin **K** is permanently energized.

Pressing the control button Ⓘ enables the functions **I** to **III**.

If the control button Ⓘ is pressed again with the function **III**, function **I** is available again.

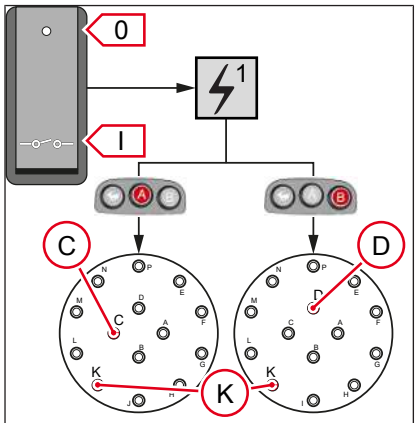

Fig. 162: 14-pin plug receptacle, pin C and D

Function I – Pin C and D

- Move the switch to position **I**.
  - ⇨ The symbol $\lightning^{1}$ appears on the display.

⇨ Pin **K** is energized.

- Press button Ⓐ.

⇨ Pin **K** and **C** are energized.

- Press button Ⓑ.

⇨ Pin **K** and **D** are energized.

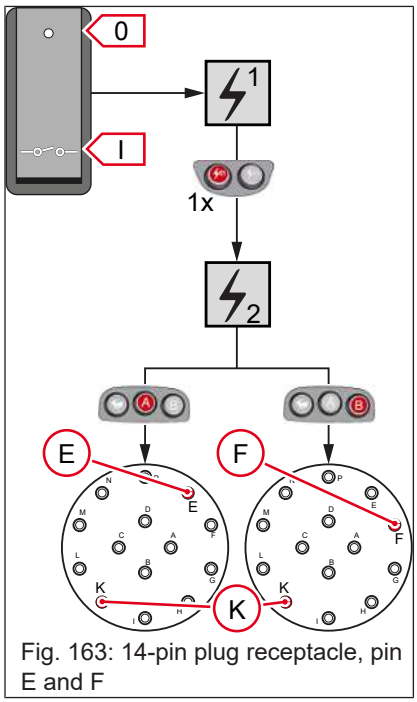

Fig. 163: 14-pin plug receptacle, pin E and F

Function II – Pin E and F

- Move the switch to position **I**.
  - ⇨ The symbol $\lightning^{1}$ appears on the display.

⇨ Pin **K** is energized.

1. Press button Ⓘ once.
   - ⇨ The symbol $\lightning_{2}$ appears on the display.
2. Press button Ⓐ.
   - ⇨ Pin **K** and **E** are energized.
3. Press button Ⓑ.
   - ⇨ Pin **K** and **F** are energized.

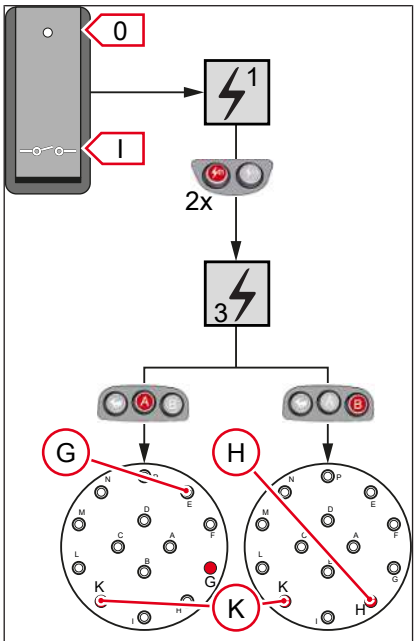

Fig. 164: 14-pin plug receptacle, pin G and H

Function III – Pin G and H

- Move the switch to position **I**.
  - ⇨ The symbol appears on the display.

⇨ Pin **K** is energized.

1. Press button twice.
   - ⇨ The symbol appears on the display.
2. Press button Ⓐ.
   - ⇨ Pin **K** and **G** are energized.
3. Press button Ⓑ.
   - ⇨ Pin **K** and **H** are energized.

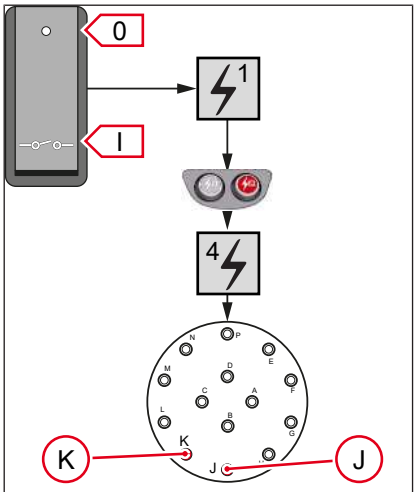

Fig. 165: 14-pole plug receptacle, pin J

Function – Pin J

- Move the switch to position **I**.
  - ⇨ The symbol appears on the display.

⇨ Pin **K** is energized.

- Press button .
  - ⇨ The symbol appears on the display.

⇨ Pin **K** and **J** are energized.

- Press button .

⇨ Pin **K** is energized.

6.11.2 3 pole plug receptacle in the cab



Fig. 166: Position of 3-pole plug receptacle in the cab

The 3-pole electrical plug receptacle in the cab is required for attachments which require a continuous current connection (e.g. electrically driven salt spreader).

6.11.3 12 volt socket at the driver's platform

NOTICE

Technical damage to the vehicle electrics

The 12 volt socket is secured with a fuse. If electrical devices with too high a current consumption are connected, this fuse will blow.

- ► Observe the fuse rating, see fuse assignment.
- ► Do not connect electrical devices with too high a current consumption.



Fig. 167: Position of the 12 volt socket

Item	Designation
1	Version vehicle with cab
2	Version vehicle with overhead guard

The 12 volt socket is intended for the operation of electrical devices that work with 12 volts and have a suitable plug. Here e.g. lighting for maintenance work can be connected.

6.12 Working with attachments

6.12.1 Warnings regarding work operation



⚠ WARNING

Crushing hazard due to tipping over of vehicle!

There is an increased risk of tipping when driving in curves. This may cause crushing which may result in serious injury or death.

- ► Keep the loader unit lowered during vehicle travel.
- ► Adapt the driving speed to the ambient conditions.
- ► Adapt the driving speed to the material loaded.
- ► Pay attention to persons and obstacles.
- ► Observe tipping limit of the vehicle.
- ► Reduce speed before downhill travel.
- ► Always fasten your seat belt.
- ► Ensure that no parts of the body protrude outside the vehicle.
- ► Carefully steer the vehicle if the loader unit is raised.
- ► Do not exceed the permissible payload.



⚠ WARNING

Accident hazard due to persons in the risk zone!

Persons who are in the risk zone of the vehicle or suddenly enter it can be injured by working movement or the moving vehicle. This may result in accidents that could result in serious injury or death.

- ► Interrupt work immediately if persons enter the risk zone.
- ► Adjust the mirror correctly. Use visual aids such as, e.g. a camera.
- ► Observe extreme caution when reversing.



⚠ CAUTION

Accident hazard due to overload and sudden movements!

Overload and sudden movements can cause accidents and injury.

- ► Take into account the vehicle’s payloads.
- ► Actuate the control lever carefully.



Information

Adjust the travel speed when driving into the material to be loaded according to its type and the given conditions.

Avoid too much wheel spin. Tire wear and fuel consumption increase unnecessarily and the vehicle's output is not fully utilized.

6.12.2 Described attachments

This operator's manual describes exclusively the use of the following attachments.

- Light-weight materials bucket
- Earth bucket
- Earth bucket with digging teeth
- 4-in-1 bucket
- Pallet fork
- Fork-and-grab attachment

If other attachments are to be used, the operator's manual for the attachments must be observed. Specific operator's manuals can be ordered from your dealer.

6.12.3 Level indicator for attachments

The level indicator for attachments allows you to better estimate their tilt position.

Setting the level indicator

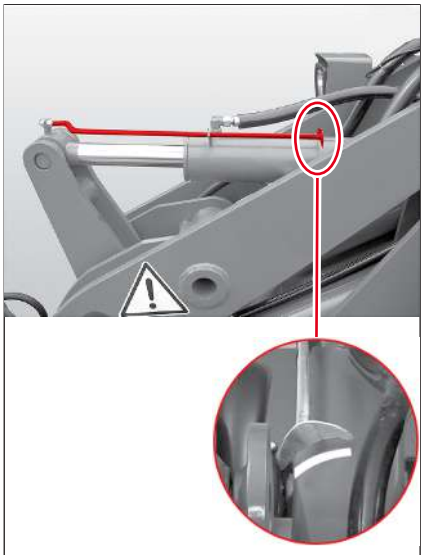

Fig. 168: Marking on tilt cylinder

1. Lift the attachment slightly and align the lower side parallel to the ground.
2. On the tilt cylinder, mark the position where the level indicator is with paint or a colored tape.
   ⇨ In any position of the loader unit, the lower side of the attachment is parallel to the ground when the level indicator is at the mark on the tilt cylinder.

When using different attachments, a mark can be made on the tilt cylinder for each attachment.

6.12.4 Using the lightweight material bucket and earth bucket

Use the lightweight material bucket for lightweight materials such as grain, maize and concentrated feed.

Use the earth bucket for heavy materials such as gravel, sand, soil and rock.

Intended use

The designated use of the attachments lightweight material/earth bucket is loosening, picking up, transporting and dumping material.

Transporting persons in the lightweight material/earth bucket is not in compliance with the designated use.

Working with the lightweight material or earth bucket

The bucket can be used for loading or excavation work. Practice working with the bucket on free and safe terrain before starting work for the first time.

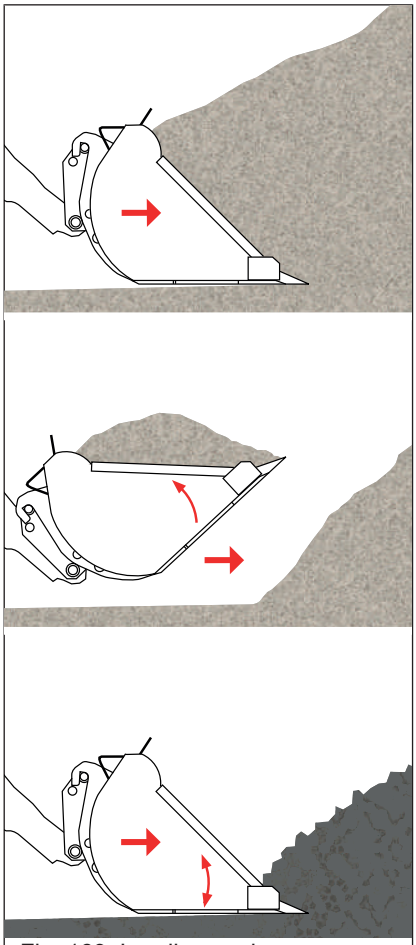

Fig. 169: Loading work

Loading work

Pick up material:

1. Lower the attachment and align it parallel to the ground.
2. Drive into the material to be loaded.
   ⇨ Pay attention to the travel speed.
3. Raise the loader unit a little to load the front axle of the vehicle.
   ⇨ The wheel slip can be reduced manually by inching.
4. Tilt the attachment when it fills.

⇨ Attachment is filled.

If material is to be loaded into which the cutting edge of the bucket can only penetrate with difficulty, the joystick can be used to generate an up and down movement of the cutting edge. This facilitates the penetration of the cutting edge into the material.

Unload Material:

1. Drive to unloading position with filled attachment.
   ⇨ Keep the loader unit as close to the ground as possible
2. Travel to the unloading position in a straight line.
3. Lift the attachment to the required height just before the unloading position.
4. Drive forward as far as necessary.
5. Tilt out the attachment.

⇨ The material falls out.

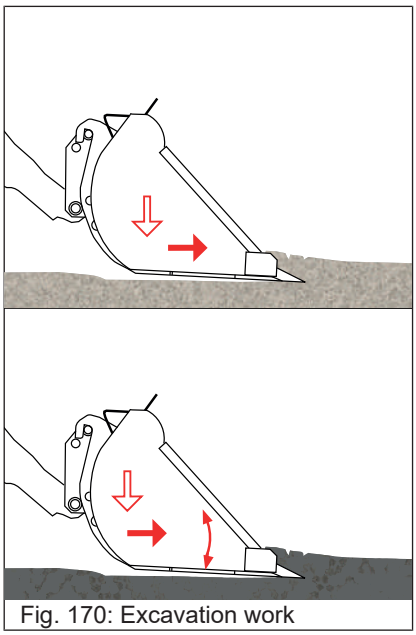

Fig. 170: Excavation work

Excavation work

1. Lowering the attachment.
2. Tilt out the attachment slightly.
   ⇨ A digging angle is established.
3. Travel forward.
4. Press the loader unit slightly downwards with the joystick.
   ⇨ The attachment penetrates the ground.
5. Make the digging angle flatter.
   ⇨ An even layer is removed. Wheel slip is avoided.

⇨ Attachment fills up.

If material is to be excavated into which the cutting edge of the bucket can only penetrate with difficulty, the joystick can be used to create an up and down movement of the cutting edge. This facilitates the penetration of the cutting edge into the material.

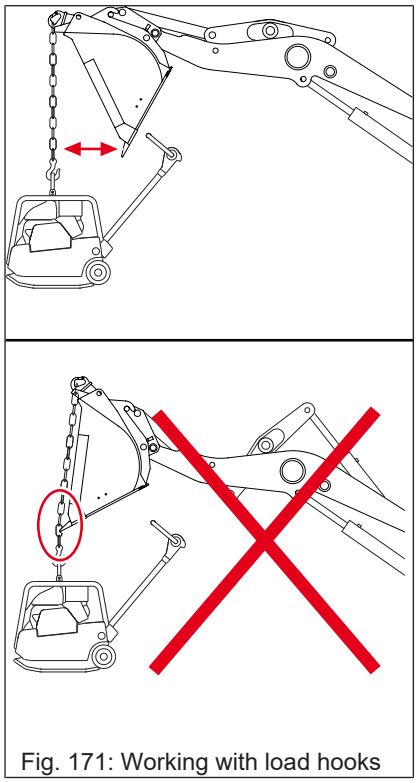

Fig. 171: Working with load hooks

Working with a load hook

When working with the load hook, the safety regulations for lifting gear applications must be observed: see Lifting gear applications on page 24

Chains must be used for lifting and transporting loads with the load hook. The load must be freely suspended on the load hook. The chain must not rub against the cutting edge.

1. Hitch the chain onto the load hook.
2. Lift the loader unit to the required height.
3. Tilt out the attachment.
4. Drive over the load to be lifted.
5. Safely hitch the chain onto the load.

⇨ The load can be raised and transported.

6.12.5 Using a 4-in-1 bucket

Practice using the 4-in-1 bucket before working with it for the first time.

Intended use

The 4-in-1 bucket attachment is designed for loading, digging, grabbing, leveling, digging and spreading loose material such as sand, soil and gravel.

Loading and excavation work

The closed 4-in-1 bucket can be used as a lightweight material bucket or earth bucket. For the operation of the 4-in-1 bucket: see Using the lightweight material bucket and earth bucket on page 145.

The bucket is opened, and not tilted out, for unloading at higher heights.

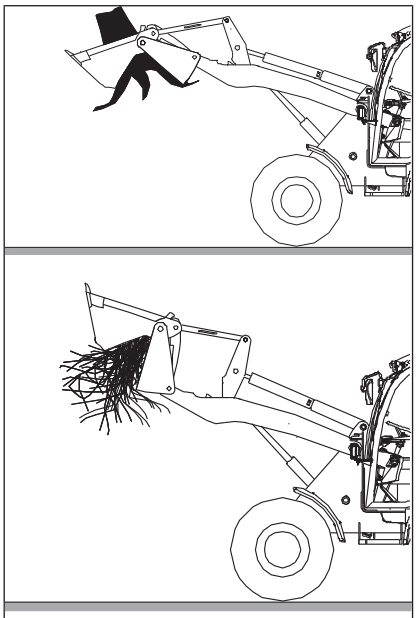

Fig. 172: Grabbing large, bulky objects

Grabbing large objects

Bulky or large objects can be grabbed and safely transported with the 4-in-1 bucket.

1. Open the bucket.
2. Position the bucket over the object to be grabbed.
3. Lower the loader unit.
4. Close the bucket.

⇨ Lift and transport the object to be picked up.

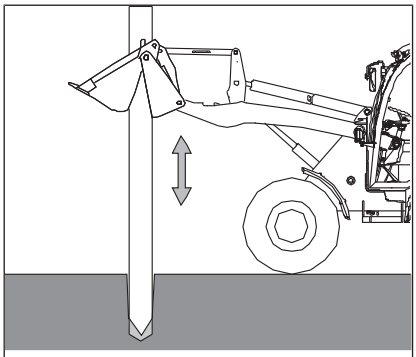

Fig. 173: Pulling out and replacing posts

Pulling out and replacing posts

1. Open the bucket.
2. Place bucket over the post.
3. Lower the loader unit.
4. Close the bucket.
5. Grasp the post securely.
6. Loosen the post by carefully moving it upwards and downwards.
7. Raise the loader unit.

⇨ Pull out the pole.

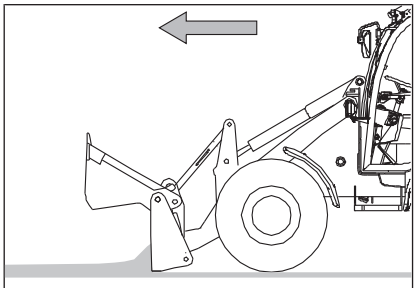

Fig. 174: Grading with a 4-in-1 bucket

Leveling work

1. Fold up the front half of the bucket.
2. Lower the bucket to the ground.
3. Set the depth of the layer you want to remove with the lift hydraulics.
4. Set the angle of the rear cutting edge.

⇨ Grade the surface by performing forward vehicle travel.

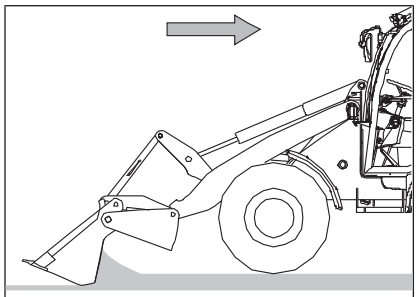

Fig. 175: Draw material back

Draw material back

1. Fold up the front half of the bucket.
2. Lower the bucket to the ground.
3. Set the angle of the front cutting edge.

⇨ By reversing, the bucket fills slowly.

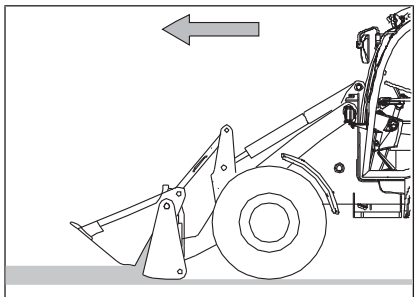

Fig. 176: Scraping work

Scraping work

1. Set a flat digging angle.
2. Fold up the front half of the bucket by about 10 to 15 cm.
3. Lower the bucket to the ground.
4. Set the depth of the layer you want to remove with the lift hydraulics.
5. Pick up material by performing forward vehicle travel.

⇨ The material rolls into the bucket and is picked up at the same time.

This position allows to strip grass turf, e.g. down to a thickness of about 8 cm

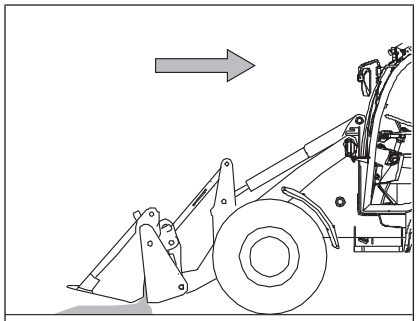

Fig. 177: Spreading material

Spreading material in thin layers

1. Fill bucket with material to be spread.
2. Open the bucket according to the material and flow rate.

⇨ Spread the material evenly on the surface.

6.12.6 Using the fork and grab

Practice using the fork-and-grab attachment before working with it for the first time.

Intended use

The fork-and-grab attachment is used for picking up, transporting, loading and spreading loose material such as silage, hay, straw, green fodder and manure. Transporting tree trunks, stones and similar materials as well as persons does not constitute intended use.

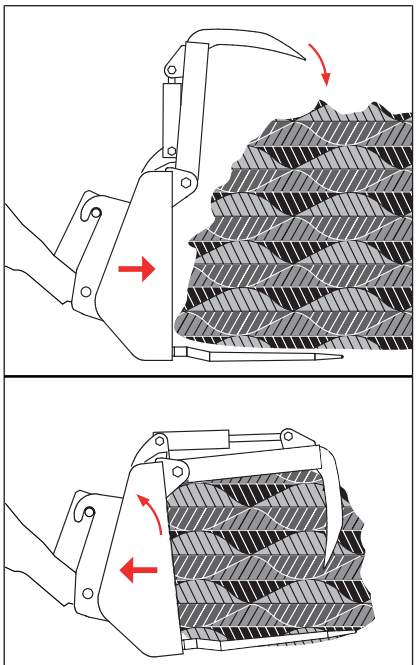

Fig. 178: Loading with the fork-and-grab attachment

Working with the fork-and-grab attachment

1. Open the attachment.
2. Lowering the attachment.
3. Set the attachment parallel to the ground.
4. Drive into the material to be loaded.
   ⇨ Pay attention to the travel speed.
5. Slightly raise the loader unit
   ⇨ A load is applied to the front axle of the vehicle.
   ⇨ The wheel slip can be reduced manually by inching.
6. Close the attachment.

For solid materials, such as solidified manure in stables, the load can be loosened by tilting in the attachment.

1. Travel to the unloading position in a straight line.
2. Lift the attachment to the required height just before the unloading position.
3. Drive forward as far as necessary.
4. Tilt out the attachment.
5. Open the attachment.

⇨ The material falls out.

6.12.7 Using the pallet fork



⚠ WARNING

Accident hazard due to pallet fork tines!

The fork tines of the pallet fork can cause serious injury or death during operation.

- ► Remove the pallet fork before driving on public roads and transport it separately.
- ► In the case of a pallet fork with folding forks, fold them up before driving on public roads.
- ► Bent, torn or otherwise damaged forks must not be used.
- ► Before starting work, ensure that the fork tines on the fork carriage are safely locked.
- ► Lower the pallet fork to the ground before leaving the vehicle.

Practice using the pallet forks before working with them for the first time.

Intended use

The pallet fork attachment is used for raising, transporting and setting down loads. Any other use of the pallet fork is not in accordance with its designated use. The pallet forks consist of the fork carriage and forks. The forks must always be used in pairs as delivered. The operator must receive special training for using the pallet forks.

Setting the gap between the fork tines



⚠ WARNING

Tipping hazard due to incorrect adjustment of fork arms!

A tipping vehicle can cause serious injury or death.

- ► Adjust the spacing of the fork arms so that they are symmetrical to the center line of the vehicle.
- ► Adjust the spacing of the fork arms so that they are as far apart as possible.



⚠ CAUTION

Danger of crushing when shifting the fork arms!

Fingers and hands can be crushed between the fork carriage and fork arms.

- ► Do not touch the sliding surface of the fork carriage when shifting the fork arms.
- ► Wear protective gloves.

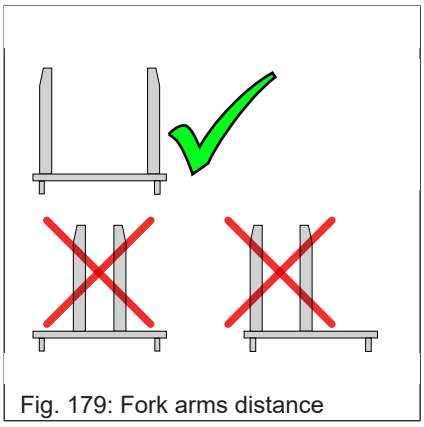

Fig. 179: Fork arms distance

The forks of the pallet fork are adjustable.

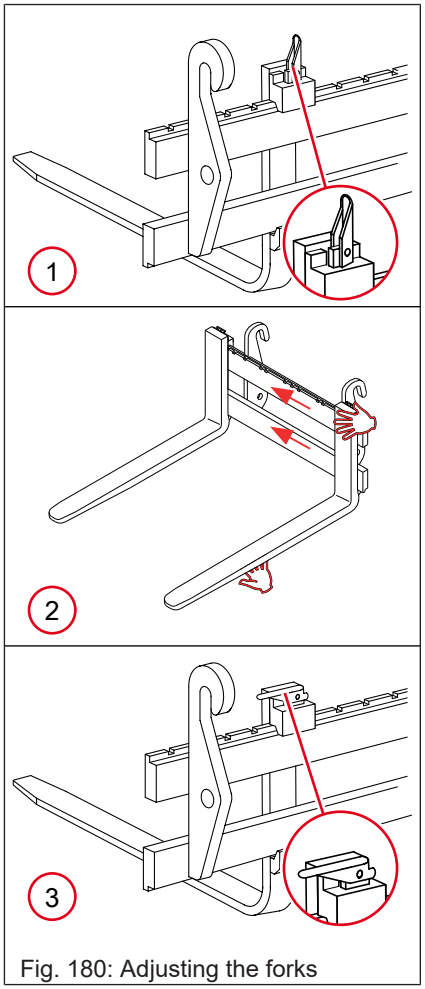

Fig. 180: Adjusting the forks

1. Raising the attachment.
   ⇨ Recommended height is approx. 10 to 30 cm.
2. Move the forks to position **1** .
   ⇨ Locking is released.
3. Push the forks into the required position.
   ⇨ Handle forks only as shown in position **2**.
4. Move the forks to position **3**.
5. Move the forks until the lock engages.
   ⇨ Handle forks only as shown in position **2**.
   ⇨ The lock is engaged.

⇨ Distance is set.

Picking up a load



⚠ WARNING

Risk of injury from falling load when the loader unit is raised!

Falling load (e.g. large bales or bale stacks) can lead to serious injury or death.

- ► Never lift or transport several large bales or crates at the same time.
- ► The stacking of general cargo with vehicles without a driver's protective roof or cab is prohibited.
- ► Do not step under the raised loader unit.
- ► Do not tilt the attachment up to the stop when the loader unit is raised.

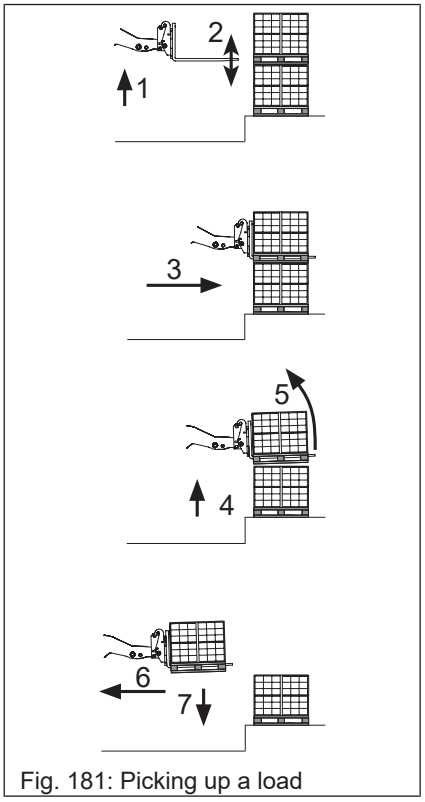

Fig. 181: Picking up a load

Check whether the permissible bearing load of the vehicle and pallet forks is appropriate for the weight of the load.

✓ Adjust the fork spacing and lock the forks.

1. Approach the load in a straight line.
2. Set the pallet forks to the required height (**1**) in a horizontal position (**2**).
3. Travel forward until the load touches the fork carriage (**3**).
4. Slightly raise pallet fork (**4**) and tilt it back (**5**).
5. Reverse the vehicle (**6**) and set the load to transport height (**7**).

Transporting a load

- Transport the load as close as possible to the ground.
- Adjust a transport height that allows moving the pallet forks across uneven ground without touching it. Adjust the height during transportation if necessary.
- During vehicle travel up or down a slope the load must always be on the uphill side.
- Secure the load with ratchet straps if necessary.
- If necessary, transport large, bulky loads in reverse to ensure sufficient visibility.

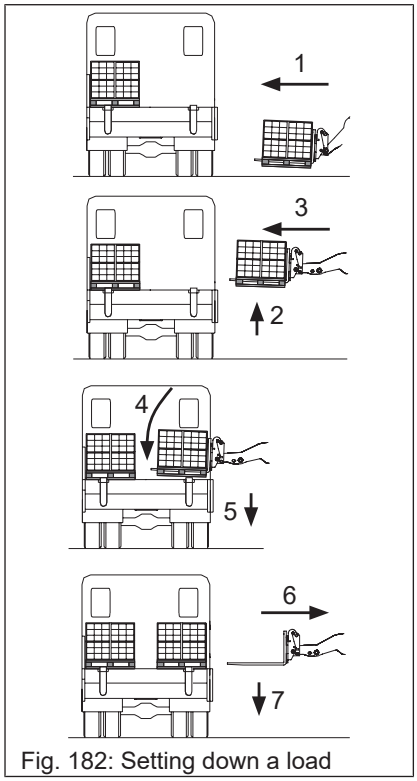

Fig. 182: Setting down a load

Setting down a load

1. Travel to the unloading position in a straight line (**1**).
2. Do not lift the load to the required height until immediately in front of the unloading position (**2**).
3. Drive forward until the load is above the unloading position (**3**).
4. Position the pallet fork horizontally (**4**), lower the loader unit and lower the load (**5**).
5. Retract until the pallet fork can be lowered freely (**6**).
   ⇨ Lower the pallet fork (**7**).
6. Reverse away from the unloading position.

6.12.8 Work platform

The attachment of a working platform to this vehicle is prohibited.

7 Transportation

7.1 Towing

7.1.1 Warnings for towing



⚠ WARNING

Risk of accident due to towing of the vehicle!

Towing the vehicle may cause situations that cannot be foreseen. This may result in accidents that could result in serious injury or death.

- ► Only tow the vehicle if the steering and braking systems are fully functional.
- ► Only tow the vehicle with towing gear of sufficient dimensions.
- ► No persons are allowed to stay in the range of action of the towing gear during towing.
- ► Secure the vehicle against unintentional movement and unauthorized use once towing is over.



NOTICE

Only tow the vehicle if the steering and brake are fully functional!

- ► Only tow the vehicle to the extent necessary for the towing operation, but not more than 500 meters.
- ► Do not exceed a maximum speed of 5 km/h.
- ► For longer distances, use a transport vehicle or have the vehicle repaired on site.

7.1.2 Emergency steering characteristics

The steering system is only operational when the engine is running normally.

If the drive fails, the vehicle can still be steered. Operating the steering system then requires greater strength and the steering will only respond slowly. Take this condition into account especially when towing the vehicle. Adjust the towing speed to the changed steering behavior (walking pace)!

7.1.3 Short circuit the traveling drive

NOTICE

Risk of damaging the hydraulic system!

- ► Do not screw in the threaded bolts of the bypass valves any further than described, otherwise important parts of the variable displacement pump valves are destroyed.
- ► After towing, unscrew the threaded bolts of the bypass valves again as far as the stop and secure them with the hexagon nuts. Otherwise vehicle operation is not possible!

The traveling drive must be short circuited in order to tow the vehicle.

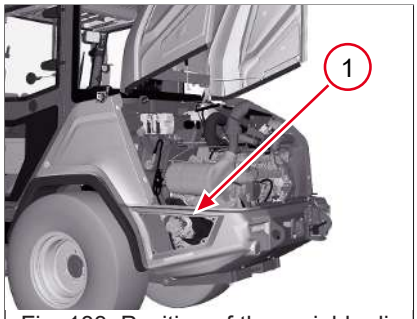

Fig. 183: Position of the variable displacement pump

Preparation for short circuiting the drive system

✓ The loader unit is lowered.

1. Apply the parking brake.
2. Switch off the ignition and remove the key.
3. Open the engine hood.

⇨ The variable displacement pump **1** becomes accessible.

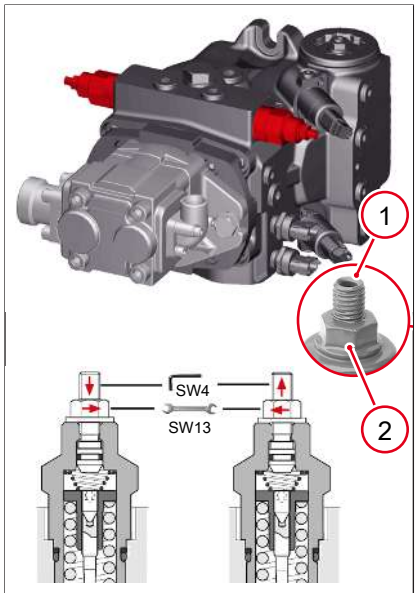

Fig. 184: Activate bypass for towing

Activate bypass

✓ Required tools: Allen wrench with 4 mm key width across flats and wrench with 13 mm key width across flats.

1. Loosen hexagon nuts **2** of the bypass valves.
2. Screw in threaded bolts **1** until they are flush with the hexagon nuts.

⇨ The drive system is short circuited.

Deactivating the bypass

After towing, immediately restore the original setting of the bypass valves. Otherwise vehicle operation is not possible.

✓ Required tools: Allen wrench with 4 mm key width across flats and wrench with 13 mm key width across flats.

1. Unscrew threaded bolts **1** as far as they will go.
2. Tighten hexagon nut **2** to 22 Nm torque.
3. Check drive system carefully for function.
   ⇨ Vehicle is ready to drive after repair.

7.1.4 Manually releasing the multi-disc brake



⚠ WARNING

Risk of accident due to manually released parking brake!

If the parking brake is released manually, the vehicle may roll away and cause accidents with serious injuries or death.

- ► Before manually releasing the parking brake, secure the vehicle against unintentional rolling away (e.g. by placing wedges under it).
- ► Do not release the parking brake manually on uphill and downhill slopes.
- ► Do not park the vehicle unsecured with the parking brake released manually.



NOTICE

Damage to the vehicle caused by incorrectly adjusted parking brake

An incorrectly adjusted parking brake can damage the brake or cause the vehicle to roll away unintentionally.

- ► After towing, the manually released parking brake must be reactivated and set by an authorized service center.

If the vehicle is equipped with a multi-disc brake, it may be necessary to release the parking brake manually.

Preparation for releasing the parking brake before starting to drive

1. Switch off the engine and remove the ignition key.
2. Secure the vehicle against unintentional rolling away, e.g. by placing wedges underneath.
3. Place the oil collection container under the screws to be loosened, oil may leak out.

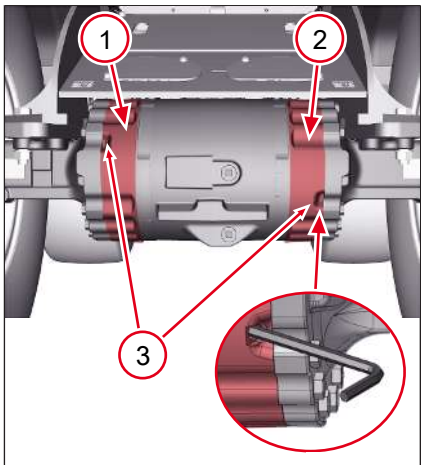

Fig. 185: Front axle from the front

Item	Designation
1	Brake right
2	Brake left
3	Screw plugs of the emergency release elements

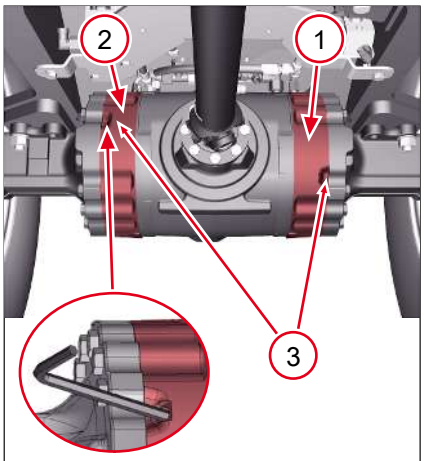

Fig. 186: Front axle from the rear

Release parking brake

There are two brakes on the front axle that need to be released, **1** and **2**. There are two emergency release elements on each brake, **3**. The first of the brakes to be released is not specified.

Required tools: Allen wrench with 10 mm width across flats and hexagon socket wrench with 8 mm width across flats.

1. Unscrew the screw plug by turning it counterclockwise with an 8 mm Allen key and keep it.
   ⇨ A setscrew with hexagon socket width across flats 10 mm becomes accessible. Attention! Do not unscrew the setscrew.
2. Turn the setscrew clockwise by hand using a 10 mm hexagon socket wrench with 10 mm width across flats, until resistance can be felt.
   ⇨ Emergency release element is in contact with the parking brake piston.
3. Carry out these activities for the second emergency release element on the brake as well.
   ⇨ Brake is ready for release.
4. Screw in both setscrews alternately in steps of 1/4 turn using a 10 mm hexagon socket wrench by turning clockwise.
   ⇨ The parking brake is released after 5/4 turns of each setscrew.
5. Reinsert the screw plugs and tighten to a tightening torque of 30 Nm.

⇨ Brake is released.

- Carry out the activities described above for the second brake as well.

⇨ When both brakes are released, the vehicle can be towed.

7.1.5 Towing the vehicle

Observe safety instructions for towing: see towing, loading and transport. on page 28

Getting ready for towing

✓ The drive system is short circuited.

1. Close and lock the engine hood.
2. Remove wheel chocks before towing.
   ⇨ The vehicle can be towed.
3. Release parking brake to tow.

Towing

1. Put the towing vehicle, with sufficient traction force and a safe braking system, in the towing position.
2. Use the vehicle's towing gear for towing the vehicle.
3. Attach a suitable recovery means (tow bar) to the recovery device (eyelets, towing device) on the vehicle.
4. Bear in mind the vehicle’s dimensions and weights.
5. Release parking brake.
6. Vehicle at a maximum speed of 5 km/h. For recovery, if possible, keep the engine running at idle speed.

7.1.6 Towing gear



⚠ WARNING

Accident hazard when pulling trailer loads!

Pulling trailer loads changes the braking effect and driving behavior of the vehicle. This may result in accidents that could result in serious injury or death.

- ► Do not use the towing gear to tow trailer loads.
- ► Only hitch trailer loads if the vehicle is equipped with special trailer coupling.

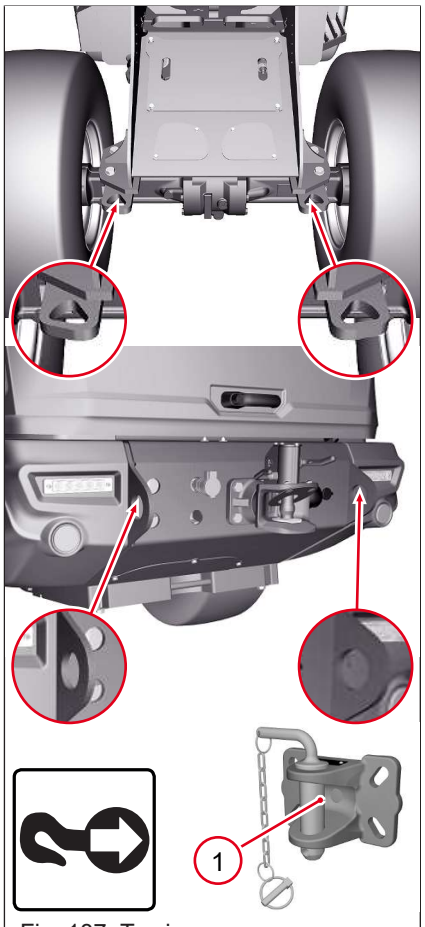

Fig. 187: Towing gear

Use the front or rear lashing eyes to recover the vehicle from a hazardous area. Attach towing equipment (chains, belts, ropes, etc.) securely to both eyelets.

The bypass valves of the variable displacement pump must be activated and the parking brake must be released for towing.

The vehicle can be optionally equipped with a hill coupling **1**. The hill coupling may not be used to pull trailer loads.

1. Release the pins.
2. Pull out the bolts.
3. Bring the towing gear (e.g. tow bar) into the towing fixture.
4. Insert and secure bolts.

⇨ The vehicle can be towed.

If the vehicle is equipped with a maneuvering coupling or an automatic trailer coupling, it must be used as a towing gear.

7.2 Loading

7.2.1 Information on loading the vehicle



⚠ WARNING

Accident hazard due to incorrect loading!

Incorrect loading can cause the vehicle to tip over, for example. This may result in accidents that could result in serious injury or death.

- ► Clean the vehicle before loading or transporting it.
- ► Use a transport vehicle with the appropriate load-bearing capacity.
- ► Pay attention to the vehicle's operating weight.
- ► Proceed with special care when loading the vehicle in conditions of snow and ice.

In order to avoid injury or accidents, observe the following instructions when loading the vehicle.

- Refer to chapter for the weight and dimensions of the vehicle to be loaded see Technical Data on page 228.
- Remove any mud, snow or ice from the tires so that the vehicle can be safely driven onto the ramps.
- The loading area must be clean and non-slip.
- When positioning the vehicle on the loading surface, ensure that the center of gravity of the load is in the longitudinal center line of the transport vehicle if possible.
- The permitted total weight or the axle load of the transport vehicle must not be exceeded.
- In order to avoid accidents and injuries, the following instructions must be observed when loading the vehicle.
  - After full braking, sharp evasive maneuvers or bumps on the road, vehicle loading must be checked.
  - Auxiliary aids are e.g. anti-slip bases and linings, load-securing straps and chains, clamping beams, protective paddings, nets, edge protectors, etc.
  - Existing lashing points must always be used.

7.2.2 Load the vehicle

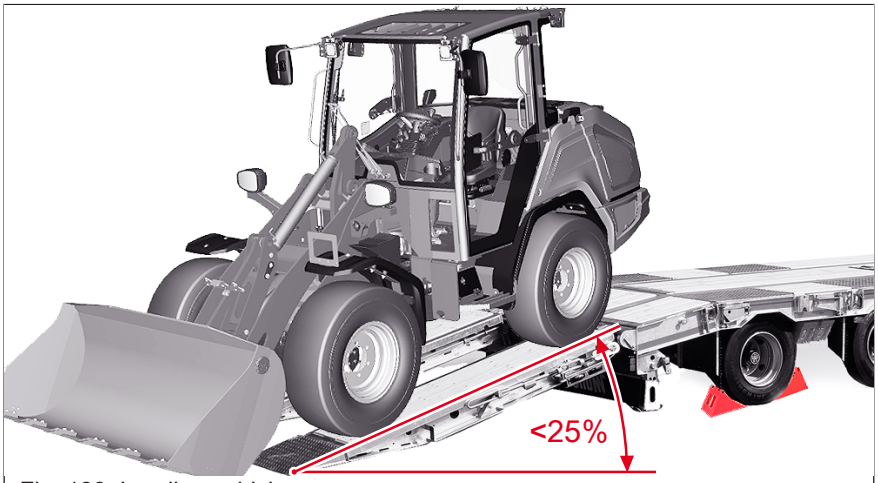

Fig. 188: Loading vehicle

The prerequisites for loading are listed in the following:

- Secure the transport vehicle with wheel chocks to prevent it from rolling away.
- Place the access ramps at the smallest possible angle.
  - Do not exceed the maximum slope.
  - Use access ramps only with an anti-skid surface.

Prepare for loading

1. Start the engine of the vehicle.
2. Lift the loader unit so that it is not possible to touch the ramps with the attachment.
3. Ensure that the attachment is securely locked.

Carry out loading

1. Carefully drive the vehicle onto the center of the transport vehicle.
2. Lower the loader unit completely. The attachment must rest on the loading area of the transport vehicle.
3. Bring the vehicle's drive system to zero position and switch off all electrical consumers.
4. Activate parking brake.
5. Switch off the ignition and remove the key.
6. If the vehicle is equipped with a drive interlock, the drive interlock is activated.
7. Exit the cab, close doors, windows and engine hood, lock and unlock.
8. Block the articulated pendulum joint.
9. Lash down the vehicle.

7.2.3 Blocking articulated pendulum joint

NOTICE

Vehicle damage.

The vehicle may be damaged by steering movements if the articulated pendulum joint is blocked.

- ► Do not operate the steering system when the articulated pendulum joint is blocked.
- ► First park the vehicle on the transport vehicle, then set the blocking device.
- ► After the transport, first release the block, then drive the vehicle down from the transport vehicle.

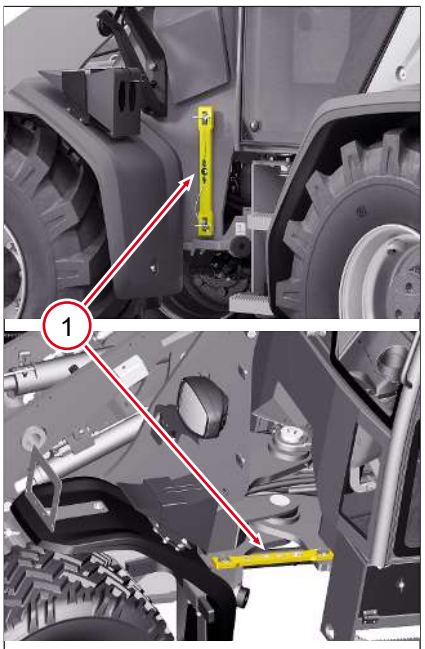

Fig. 189: Blocking articulated pendulum joint

Blocking **1** is attached to the front carriage and secured with linchpins.

1. Park the vehicle in a straight line.
2. Remove linchpins.
3. Fasten the blocking device in the blocking position.
4. Place the blocking device on the square on the rear carriage and, if necessary, readjust it with the steering wheel when the engine is switched off until the blocking device is firmly seated on the square on the front carriage.
5. Secure the blocking device with the linchpins.

Remove the blocking device in the reverse order.

7.2.4 Safety instructions regarding crane-lifting

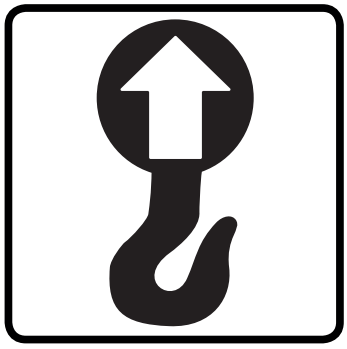

Fig. 190: Information label crane eyelets

Only use crane eyelets marked with the labels to attach the loading gear.

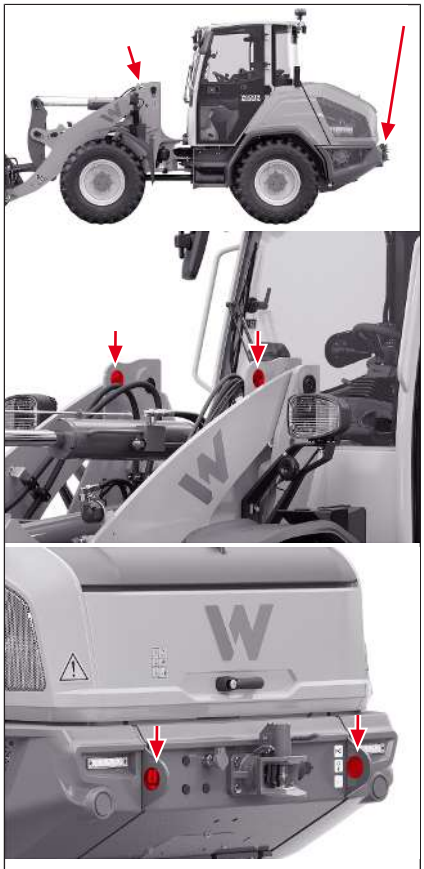

Fig. 191: Crane eyelets on the vehicle

In order to avoid injury or accidents, observe the following instructions when loading the vehicle.

- Seal off the danger zone.
- The crane and the lifting gear must have suitable dimensions.
- Take into account the vehicle's overall weight.
- Use only tested ropes, belts, hooks, shackles (screw and socket pins with lockable brackets) for fastening the vehicle.
- Have loads fastened and crane operators only guided by experienced persons.
- The signalman guiding the crane operator must be within sight or sound of him.
- The load must not be fastened by winding the lifting rope or chain around it.
- Pay attention to load distribution when attaching the lifting gear. Note the center of gravity.
- The vehicle may only be loaded in transport position without attachment or in combination with an empty standard bucket.
- Ensure that no one is in or on the vehicle.
- Stay clear of a raised load.

7.2.5 Crane-lifting the vehicle



⚠ DANGER

Fatal hazard from falling objects or falling vehicle!

Unsecured objects or an incorrectly fastened vehicle may fall. If persons are hit by these parts or the vehicle, serious or fatal injuries may result.

► Use tested, undamaged and sufficiently dimensioned lifting gear.
► Check that the lifting gear is safely fastened.
► Ensure that nobody remains under the raised vehicle.
► Always block the articulated pendulum joint before lifting the vehicle.



Fig. 192: Crane-lifting with lifting gear

Preparation for loading with crane

1. Install and safely lock the standard bucket.
2. Empty standard bucket, tilt in and lower to transport position (approx. 30 cm above the ground).
3. Move all switches and levers to zero position.
4. Switch off the ignition and remove the key.
5. Apply the parking brake.
6. Block the articulated pendulum joint.
7. Exit the cab, close doors, windows and engine hood, lock and unlock.

Loading with crane

1. Fasten the vehicle at the crane eyelets with lifting gear. Fasten the vehicle at the crane eyelets with tested lifting gear of sufficient dimensions.
2. Raise the vehicle carefully with a crane, slowly position it over the unloading position and lower it carefully.

7.3 Transportation

7.3.1 Lashing down the vehicle

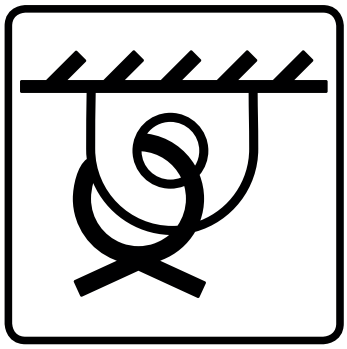

Fig. 193: Information label lashing lugs

Only use lashing eyelets marked with the labels to attach the lashing straps or chains.

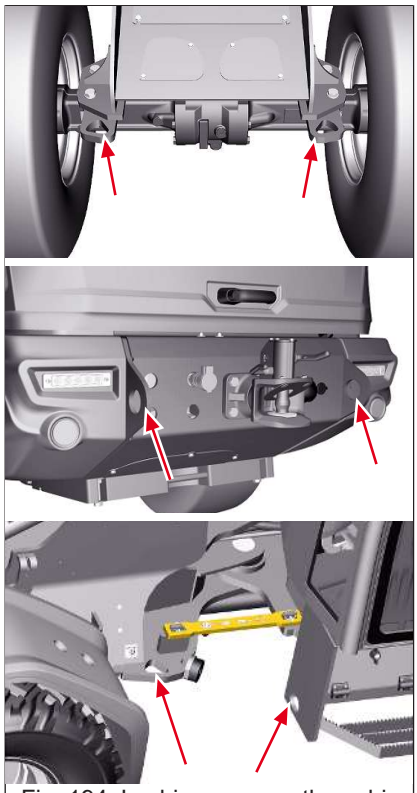

Fig. 194: Lashing eyes on the vehicle

Safety instructions on tying down the vehicle

- The transport vehicle must have a sufficient bearing load and a suitable loading surface.
- The loading surface of the transport vehicle must be clean.
- The gross weight rating and the axle loads of the transport vehicle must not be exceeded.
- Only use certified lifting and fastening gear. Adhere to the inspection intervals.
- Do not use any lifting and fastening gear that is dirty, damaged or not of sufficient size.
- In order to secure the vehicle on the loading surface, use only the fastening points provided for this purpose.
- Ensure that nobody is in or on the vehicle during transportation.
- The load-securing regulations must be observed.
- Bear in mind the weather conditions (e.g. ice, snow).
- For rail and sea transport, the vehicle must be additionally secured against slipping with anti-slip mats, positive locking or by means of wheel chocks.

Lashing down the vehicle



⚠ WARNING

Risk of accident due to improper lashing!

Improper lashing can cause the vehicle to slip, tip over or fall during transport. This may result in accidents that could result in serious injury or death.

► Always lash the vehicle to the front **and** rear of the vehicle.

► Secure the vehicle additionally with wheel chocks on the loading area of the transport vehicle.

► The specified lashing angles (± 5°) and lengths (± 0.2 m) must be observed.

► The fastening gear must be designed for the specified forces.

► Apply the specified forces to tighten the fastening gear.

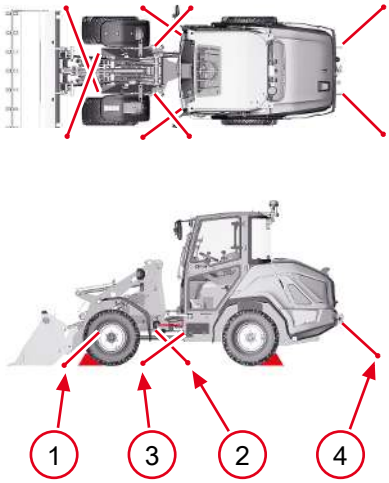

Fig. 195: Tie down the vehicle correctly

1. Stopping and securing the vehicle.
2. Block the articulated pendulum joint.
3. Secure all wheels of the vehicle at the front and rear with wheel chocks.
4. Tie down the vehicle as shown.
5. Ensure that the driver of the transport vehicle knows the total height, width and weight of his transport vehicle including the loaded vehicle before departure.
6. Ensure that the driver is familiar with the legal transport regulations of the country, in which the transport is to take place.

8 Maintenance

8.1 Information on maintenance

8.1.1 Responsibilities and prerequisites

- Perform maintenance and inspection work only with suitable protective equipment.
- Perform only the maintenance and inspection work described in this operator's manual.
- For questions concerning the maintenance and service work, please contact your service partner at any time.

8.1.2 Safety instructions

Information on the vehicle and the attachment

Only perform maintenance and inspection work if the vehicle is secured.

- A raised loader unit can fall suddenly and cause serious injury. If working under the raised loader unit is unavoidable, then the load system must be secured by a suitable support.
- Lower attachment on the ground ensuring that no movements can occur when releasing mechanical or hydraulic connections.
- Remove dirt from steps and handholds to keep them safe and ready for use.

Information on handling flammable liquids

- Do not smoke and avoid open fire when handling flammable liquids.
- Do not extinguish burning liquids with water.
- Use suitable extinguishing agents, such as powder, carbon dioxide or foam fire extinguishers.
- Always call the fire department in the event of a fire.

Information on handling fuels, oils and greases

- There is a scalding hazard from hot lubricating oil and hydraulic oil.
- Avoid any contact with oils and greases on the skin and eyes.
- Wear protective equipment.
- Do not use fuels and solvents for skin cleaning.
- Rectify any oil or fuel leaks immediately.
- Do not allow oil and oily waste to reach soil or water.
- Absorb the escaping oil or fuel immediately with a binding agent, and dispose of it in an environmentally friendly manner and separately from other waste.
- Even biodegradable, "environmentally friendly" oil must be disposed of separately, just like every other type of oil.

Information on screw connections, pipes, hydraulic hoses

- Have any leaks in the line system rectified immediately.
- A fine jet of hydraulic oil under high pressure can penetrate through the skin. Seek medical attention immediately if oil penetrates the skin or eyes.
- Do not search for leaks with your hands.
- Search for leaks using cardboard or paper on which the escaping oil can been seen.
- Do not repair damaged pipe lines and hydraulic hoses, but replace them immediately by new ones.

Information on engine exhaust

- Engine exhaust is hazardous to your health. Do not breathe in engine exhaust.
- If maintenance and inspection work has to be performed in enclosed spaces with a running engine, extract the exhaust gases with an extraction system and ensure that the space is well ventilated.

8.2 Maintenance accesses

8.2.1 Engine hood



⚠ WARNING

Injury hazard due to hot and rotating parts!

When the engine is running and for a short time thereafter, parts in the engine compartment may still be hot or rotate. This may cause crushing which may result in serious injury or death.

► Do not open the engine cover if the engine is running.

► Let the engine cool down.

► Wear protective equipment.



NOTICE

Damage to the engine caused by loose objects in the engine compartment!

► Remove all tools and objects from the engine compartment before closing the engine cover.

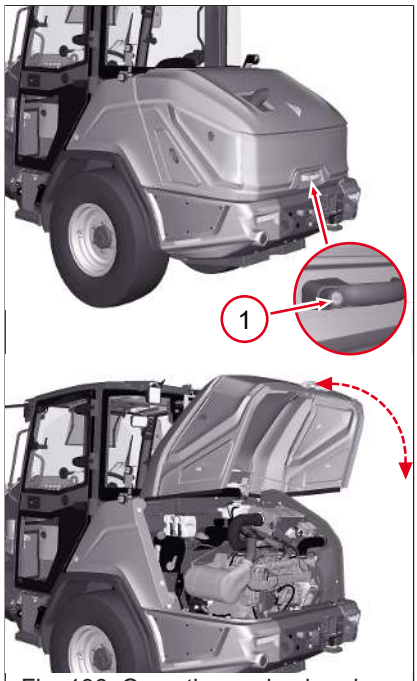

Fig. 196: Open the engine hood

Open the engine hood

Open the engine hood with the handle.

✓ Switch off the ignition and remove the key.

1. Unlock engine cover with the key.
2. Open the engine hood by pressing button **1**.
   ⇨ The engine hood is unlocked.
3. Raise the engine hood by pulling the handle.
   ⇨ The engine hood is pushed up by gas springs.

Close the engine hood

1. Grasp and close the engine hood by the handle.
2. Latch the engine hood closure lock into place by pressing it downward.
3. Pull on the handle to check whether the engine hood closure is locked in place.
4. Lock engine hood with the key.

8.2.2 Maintenance flap on the cab

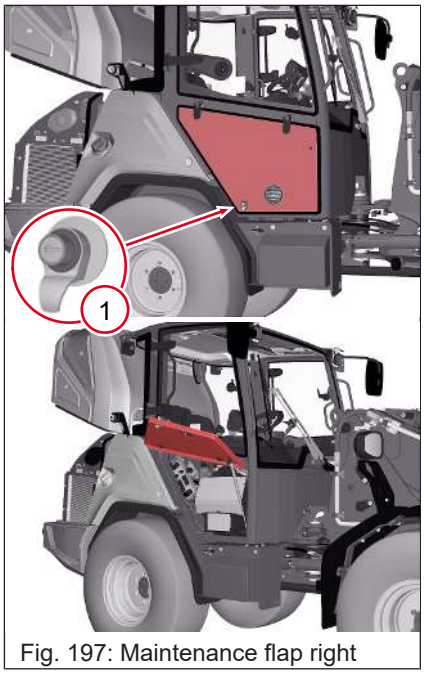

Fig. 197: Maintenance flap right

Open the maintenance flap

✓ Switch off the ignition and remove the key.

1. Unlock lock 1 with the key (the key is not the starting key).
2. Press lock 1.
   ⇨ The maintenance flap is pushed up by a gas strut.

Closing the maintenance flap

1. Press the maintenance flap down firmly until lock 1 audibly engages.
2. Lock the lock 1 with the key.

8.3 Maintenance plan

8.3.1 Daily and weekly maintenance

Maintenance cycle	Personnel	For further information	
Daily	Operating personnel	[▶ 173]	Checking components
		[▶ 179]	Check the engine oil level
		[▶ 181]	Check the coolant level

Maintenance cycle	Personnel	For further information	
		[▶ 183]	Checking hydraulic oil level
		[▶ 191]	Cleaning the vehicle from the outside
		[▶ 193]	Clean the pedals and the floor area
		[▶ 195]	Clean the radiator
		[▶ 197]	Cleaning the air filter
		[▶ 199]	Check service brake and parking brake
		[▶ 200]	Check the steering
		[▶ 208]	Checking the lighting
		[▶ 213]	Check the operator presence switch
		[▶ 214]	Checking the tires
Every week	Operating personnel	[▶ 173]	Checking components
		[▶ 174]	Leakage check
		[▶ 177]	Water separator maintenance
		[▶ 179]	Check the engine oil level
		[▶ 183]	Checking hydraulic oil level
		[▶ 185]	Check the brake fluid level
		[▶ 185]	Windshield wiper water level
		[▶ 186]	Lubricating the vehicle
		[▶ 190]	Lubricating the attachments
		[▶ 190]	Greasing the trailer coupling
		[▶ 191]	Cleaning the vehicle from the outside
		[▶ 192]	Cleaning the cab
		[▶ 193]	Clean the pedals and the floor area
		[▶ 193]	Check/replace cab breather filter
		[▶ 194]	Clean engine and engine compartment
		[▶ 195]	Clean the radiator
		[▶ 196]	Clean the air conditioning condenser
		[▶ 197]	Cleaning the air filter
		[▶ 199]	Check air intake line
		[▶ 200]	Checking the steering column adjustment
		[▶ 209]	Checking window wiper and washer system
		[▶ 209]	Servicing the battery
		[▶ 211]	Checking the locking function for the joystick
		[▶ 211]	Check the lock of the attachments
		[▶ 211]	Check the hydraulic control circuits
		[▶ 212]	Check and tighten the belt
		[▶ 213]	Checking the seat
		[▶ 213]	Check seat belt
		[▶ 214]	Checking doors and windows
		[▶ 214]	Checking safety labels and information labels
		[▶ 214]	Checking heating, ventilation and air conditioning system

Maintenance cycle	Personnel	For further information	
		[▶ 214]	Checking the tires

8.3.2 Inspection intervals

NOTICE

Technical damage due to delayed or non-executed inspections.

Regular inspections and maintenance are a prerequisite for the technically flawless operation of the vehicle. If inspections and maintenance are not carried out, not carried out on time or not carried out properly, this can lead to technical damage to the vehicle.

- ► Observe inspection intervals.
- ► Plan inspections in good time and have them carried out by an authorized service center.

Certain inspection intervals apply to the vehicle. The inspections are necessary on time or after specific operating hours, depending on which interval is reached first.

The inspections must be carried out by an authorized service center.

8.3.2.1 Display for inspections

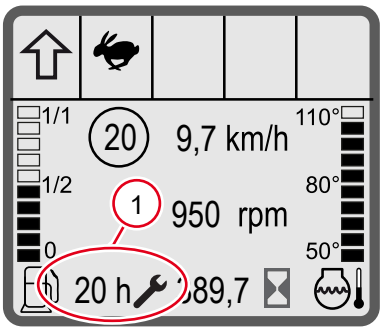

Fig. 198: Display for inspections

The symbol 🔧 indicates that the inspection display is active. The inspection display shows the remaining time in operating hours **(h)** or weeks **(w)** at position **1**. If there are less than 30 operating hours until the next inspection, the remaining number of hours is shown continuously on the display.

If the inspection due time is exceeded, the display shows the hours which were counted since the inspection became due, with a (+) in front of the number of hours.

Once the inspection that was due has been carried out, the inspection display is reset by the authorized service center

8.3.2.2 Inspections to be carried out

The listed inspections may only be carried out by an authorized service center.

Explanations of intervals and symbols

Interval or symbol	Explanation
Subdivision of inspection intervals	
A	Once after the first 100 hours of operation
B	Every 500 operating hours
C	Every 1500 hours or annually
Explanation of the markings in the inspection plan:	
◊	The activity is not required at all inspection intervals. The interval is specified in the activity.
♦	The activity is required at all inspection intervals.



Information

Note on inspection plan

The activities and intervals in the table correspond to the status of the inspection plan at the time of printing of the operator's manual. Subsequent changes to the inspection plan are not included here.

Operating and parking brake

Activity	A	B	C
Check service and parking brake for function	♦	♦	♦
Check brake oil (ATF)	♦	♦	♦
Replace brake oil (ATF) every **3000 hrs of operation**			◊
Check function of accelerator pedal and brake inching pedal	♦	♦	♦

Steering system

Activity	A	B	C
Check the steering cylinder and the steering cylinder bearing.	♦	♦	♦
Check steering mode changeover	♦	♦	♦

Electrical system

Activity	A	B	C
Check lighting and electrical system (if any)	♦	♦	♦
Check windshield wiper/washer system (if any)	♦	♦	♦
Check battery charge level	♦	♦	♦

Working hydraulics

Activity	A	B	C
Control lever (joystick): Check fuse for road travel	♦	♦	♦
Check level in hydraulic oil reservoir	♦	♦	♦
Check breather filter of hydraulic system for contamination	♦	♦	
Replace breather filter of hydraulic system			♦
Check hydraulic oil for contamination incl. high pressure and return flow filters	♦	♦	
Regenerate hydraulic oil filter	♦		♦
Replace hydraulic oil every **1500 hrs of operation** (at least every 3 years, whichever comes first).			◊
Replace the seal for all drain plugs every time you change the oil or when they are removed.			♦

Axles and transmissions

Activity	A	B	C
Check transmission oil level in transfer case.	♦	♦	♦
Check transmission oil level in front and rear axle differentials.	♦	♦	♦
Replace transmission oil in transfer case			♦
Replace the seal for all drain plugs **every time you change the oil** or when they are removed.			◊
Replace transmission oil in front and rear axle differentials.			♦

Activity	A	B	C
Check transmission oil in the planetary drives of the front axle and rear axle on the left and right side	♦	♦	♦
Renew transmission oil in the planetary drives of the front axle and rear axle on the left and right side			♦

Diesel engine

Activity	A	B	C
Renew motor oil		♦	♦
Replace the copper ring of the drain plug of the motor oil		♦	♦
Exchange motor oil filter		♦	♦
Replace all fuel filters	♦	♦	♦
Check the all radiators for dirt.	♦	♦	♦
Check coolant level	♦	♦	♦
Replace coolant every **3000 hrs of operation**			◊
Check belt for wear and pretension	♦	♦	♦
Replace belt			♦
Check crankcase ventilation system		♦	♦
Check the fuel lines, lubricating oil lines, coolant lines and breather hose as well as the air intake hoses		♦	♦
Replace the fuel lines, lubricating oil lines, coolant lines and breather hose as well as the air intake hoses every **3000 hrs of operation**			◊
Check turbocharger			♦
Clean the air filter and air filter safety cartridge	♦	♦	♦
Replace air filter		♦	♦
Replace air filter safety cartridges			♦
Check engine bearing			♦
Check water pump and thermostat			♦
Check starter			♦
Check the alternator.			♦

Cabin and chassis

Activity	A	B	C
Check driver's seat, seat belt for wear, function and fastening	♦	♦	♦
Check operator presence switch	♦	♦	♦
Check, clean, lubricate locks, door latches, hinges, etc.	♦	♦	♦
Check and clean the cab air filter (if present) and replace if necessary.	♦	♦	♦
Replace the cab air filter (if present) **annually**.			◊
Check the heating and ventilation (cab).	♦	♦	♦
Check warning and information signs for damage and loss	♦	♦	♦

Tires

Activity	A	B	C
Check tires for damage, air pressure, tread depth.	♦	♦	♦

Loader unit

Activity	A	B	C
Check locking mechanism for attachments	♦	♦	♦

Options

Activity	A	B	C
Check auxiliary control circuits for function	♦	♦	♦
Check lowering brake valves (if present) for function	♦	♦	♦
Check operation of air conditioning system, clean condenser, check cabin air filter for dirt.	♦	♦	♦
Check trailer hitch (if present) for function, damage and wear	♦	♦	♦

Lubrication

Activity	A	B	C
Lubricate according to lubrication plan	♦	♦	♦
Lubricate universal joints of cardan shafts, if nipples are present.	♦	♦	♦
Check and lubricate hinges, joints and fittings (e.g. door stays)	♦	♦	♦
Lubricate swing axle bearing of swing axle	♦	♦	♦

Other activities

Activity	A	B	C
Visual leakage check of all air and fluid lines	♦	♦	♦
Check bolts and nuts or screw connections for tightness.	♦	♦	♦

8.4 Visual check

8.4.1 Checking components

Check the following components weekly:

- Check all steel parts for damage and loose threaded fittings, in particular the protective ROPS/FOPS structure.
- Check the condition and function of the seat belt.
- Check the power coupler for the attachment.
- Check whether all pivot pins are in their correct positions and secured with their locks.
- Check the climbing aids and handholds for correct position.
- Check cab windows for breaks, cracks and stone chips.
- Check the condition of the lights and work lights.
- Check the tires for damage and penetration of sharp-edged objects.
- Check tires for wear.
- Check the condition of all safety labels and warning labels.

8.4.2 Leakage check



⚠ WARNING

Risk of injury due to pressure

A fine jet of hydraulic oil under high pressure can penetrate through the skin. This can cause serious injury.

- ► Wear protective gloves and safety glasses.
- ► Never search for leaks with your bare hands.
- ► Search for leaks using a piece of cardboard or paper on which the escaping oil can been seen.
- ► Seek medical attention immediately if hydraulic oil penetrates the skin or eyes.

Check the following components to see if they are tight:

- Check air intake line from air filter to engine.
- Check the hose lines of the cooling system.
- Check engine oil filter.
- Check fuel lines.
- Check the hose pipes and hydraulic cylinders of the steering system.
- Check the hydraulic system, control valve, lowering brake valves, hydraulic hoses and hydraulic cylinders.
- Check the hydraulic connections of all control circuits.
- Check the hose pipes of the braking system and the tank for the brake fluid.
- Check front and rear axles.

Have defects and leaks repaired by an authorized service center.

8.5 Vehicle fluids

8.5.1 Overview of vehicle fluids and filling quantities



Information

The oil level up to the markings on the measuring rods or check plugs is binding for the oil filling!

Position	Filling quantity	Fluid	Specification
Hydraulic system complete	68,0 l	Hydraulic oil HVLPD 46 (HV)	EVVA: Hyd M 46 D-HV
Hydraulic oil tank	32,0 l		
Front axle	5,2 l	Transmission oil SAE 75W80	TE-ML 05G / 05G
	8,5 l		
Rear axle	5,4 l		
Braking system	0,2 l	ATF Öl	Transmission Oil
Air conditioning system	0,85 kg	Coolant R134a	DIN8960:1998-11
Grease lubrication points		Multi-purpose grease	Water-resistant

Engine fuels



NOTICE

Damage to the engine due to incorrect filling quantity or incorrect specification of vehicle fluids!

The vehicle can be equipped with engine types. Filling quantities and specifications of vehicle fluids may differ.

- ► Ensure that the data is read from the correct table.
  - ⇨ To identify the engine, read the kW number on the vehicle's type plate. The kW figure for the corresponding engine is shown in brackets in the table heading.
- ► Do not mix engine oils of different specifications.



NOTICE

Damage to the engine due to mixed coolant

Mixing different coolants can damage the vehicle's engine.

- ► Do not mix different coolants together.
- ► Only refill coolants of the same color.



Information

Miscibility of fuels

Fuels listed in the specifications are miscible with HVO fuels.

Vehicles with a production date after January 1, 2024 are approved for HVO fuels.

Position	Filling quantity	Fluid	Specification
Fuel tank	80,0 l	Diesel with very low sulfur content (<15 mg/kg)	EU: EN590/DIN 51628 / GB BS 2869:2010 A2 / US: ASTM D975 2D S15 / JA: JIS K 2204
		Hydrotreated Vegetable Oil (HVO)	EU: EN15940
Motor oil with filter	11,5 l	Motor oil SAE 10W40 Ambient temperature: -20 °C to +40 °C	Low-soot motor oil API CJ-4 / API CK-4
Cooling system capacity	13,0 l	Water with commercially available HD-coolant/antifreeze compound	DQC CD14 / ASTM D6210 / ASTM D3306

8.5.2 Fuel level

⚠ CAUTION

Health hazard due to fuel!

Fuel and its vapors are harmful to health.

- ► Avoid contact with the skin, eyes and mouth.
- ► Seek medical attention immediately in case of accidents with fuel.
- ► Wear protective equipment.

⚠ CAUTION

Fire hazard due to fuel!

Fuels form flammable vapors. This can cause fires that lead to injuries.

- ► Do not smoke, avoid fire and open flames.
- ► Gasoline admixtures for diesel are prohibited.
- ► Keep vehicle clean and wipe up spilled fuel immediately.

NOTICE

Damage due to excessive sulfur content in the fuel!

Low-grade fuel can cause damage to the engine.

- ► Do not use heating oil.
- ► Do not add gasoline.

8.5.2.1 Refueling the fuel

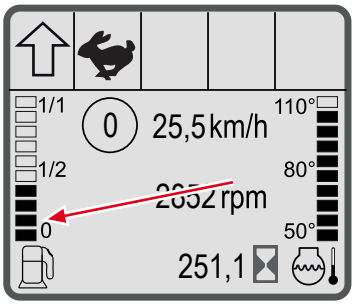

Fig. 199: Fuel level gauge for diesel tank

Fuel level gauge

The indicator on the display shows the fuel level in the tank. Refuel when the last bar is shown in the display.

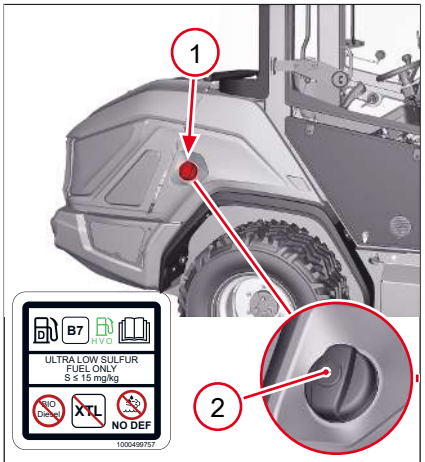

Fig. 200: Position of the filler neck

The filler opening is located at position **1** on the vehicle.

1. Lower the loader unit to the ground.
2. Switch off the ignition and remove the key.
3. Unscrew the rain cap **2** from the lock on the fuel filler cap.
4. Open the cover of the filler opening.
5. Unscrew the lid of the fill opening.
6. Carry out the refueling process.
7. Close the fill opening carefully after refueling.

Environment

Fuel is harmful to the environment!

- ► Avoid releasing it into the environment.
- ► Immediately absorb diesel fuel leaks, spills or overflowing fuel with a binding agent.
- ► Dispose of fuel or binding agent in an environmentally friendly manner and separately from other waste.
- ► If larger quantities of fuel are released, notify the competent authorities (e.g. nature conservation authority, fire brigade, etc.).

8

8.5.2.2 Water separator maintenance

Preparation for maintenance In the engine compartment

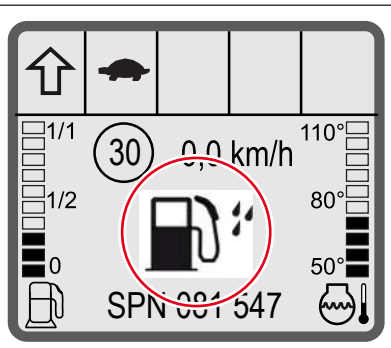

Fig. 201: Symbol on the water separator display

1. Park the vehicle on a stable, level and dry surface.
2. Secure the vehicle with the parking brake.
3. Lower the loader unit to the ground.
4. Switch off the ignition and remove the key.
5. Let the engine cool down.
6. Open the engine hood.

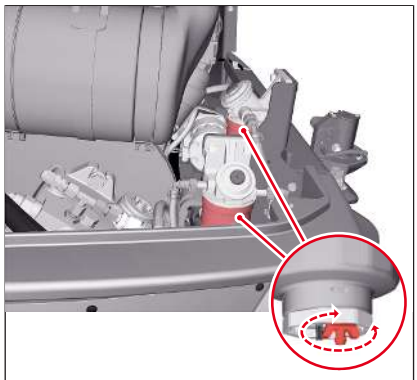

Fig. 202: Fuel filter of the vehicle

Fuel filter location

The vehicle is equipped with two fuel filters. Both fuel filters are equipped with a water separator. Water in the fuel may cause functional disruptions and damage. The water separator on the fuel filter must be checked regularly.

Drain water

1. Place a container under the water separator .
2. Remove the drain plug from the filter.
   ⇨ The collected water drains.
3. Firmly re-tighten the drain plug.
4. Bleed the fuel system.
5. Start the engine and check the fuel filter for leaks.

8.5.2.3 Bleeding fuel system

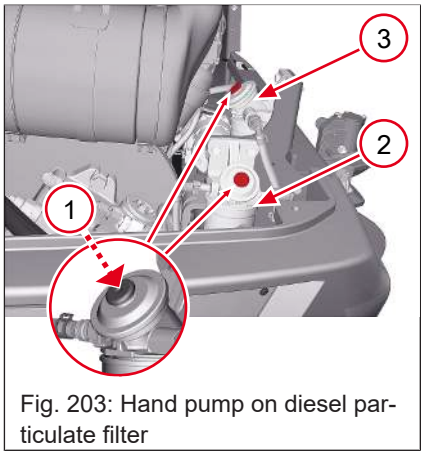

Fig. 203: Hand pump on diesel particulate filter

Item	Designation
1	Manual feed pump
2	Fuel prefilter
3	Fuel main filter

If water was drained from the water separator or the vehicle's tank was run out of fuel, it may be necessary to prime the fuel system.

Both fuel filters must be bled. Bleed the prefilter first, then the main filter.

✓ Water was drained from the fuel filter.

1. Check fill level in the display of the vehicle, refuel if necessary.
2. Pump using the manual priming pump **1**.
   ⇨ A back-pressure is caused during pumping.
3. Pump three or four more times if a back-pressure is noticeable.
   ⇨ Engine is ready to start.
4. Close the engine hood.
5. Start the engine and let it run idling mode for approximately five minutes to finish the priming process.

8.5.3 Fill level engine oil



NOTICE

Damage to the engine due to incorrect fill level of the engine oil!

► The oil level must not fall below the MIN mark on the oil dipstick.
► The oil level must not exceed the MAX mark on the oil dipstick.

Preparation for maintenance In the engine compartment

1. Park the vehicle on a stable, level and dry surface.
2. Secure the vehicle with the parking brake.
3. Lower the loader unit to the ground.
4. Switch off the ignition and remove the key.
5. Let the engine cool down.
6. Open the engine hood.

8.5.3.1 Check the engine oil level

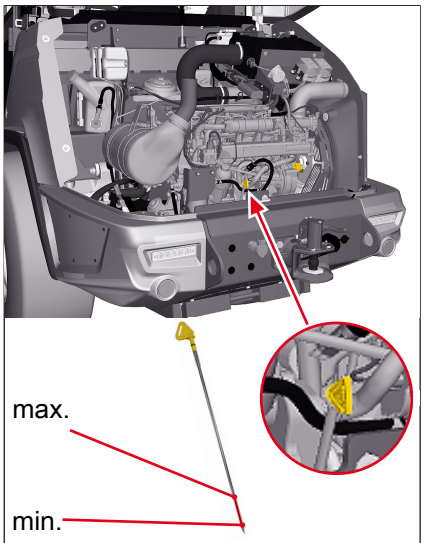

Fig. 204: Check the engine oil level

✓ Pay attention to the preparations for maintenance in the engine compartment.

1. Pull out oil dipstick.
2. Wipe the oil dipstick with a clean and fiber-free cloth.
3. Plug the oil dipstick back in.
4. Pull out the oil dipstick again.
5. Check the oil level.
   ⇨ The oil level must be between the “Minimum” and “Maximum” marks.
6. Plug the oil dipstick back in.

8.5.3.2 Refill engine oil



NOTICE

Using the wrong engine oil can damage the engine!

► Only use engine oil with the correct specification.

► Use a funnel with a hose extension as a filling aid.

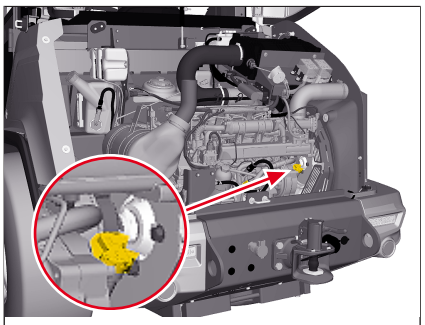
Fig. 205: Refill engine oil

If the oil level is below the “Minimum” mark, the engine oil must be refilled at the filler opening **1**.

✓ Engine oil level was checked.

1. Open the cover of the fill opening for engine oil.
   ⇨ Turn the cover counterclockwise.
2. Add engine oil.
3. Check the engine oil level.
   ⇨ The “Maximum” mark is reached.
4. Close the fill opening.
   ⇨ Turn the cover clockwise.

8.5.4 Level of coolant



⚠ WARNING

Risk of scalding due to hot coolant!

The cooling system is under pressure after switching off the engine. The coolant has heated up and expanded. When the fill opening is opened, the pressure escapes and hot liquid can splash out. Severe scalding can occur.

- ► Never open the fill opening when the engine is hot or the cooling system is under pressure.
- ► Allow engine to cool sufficiently.
- ► Wear protective equipment.



NOTICE

Technical damage due to incorrect or insufficient coolant!

- ► Only use coolant with the correct specification. See tables for vehicle fluids and filling quantities.
- ► The coolant should consist of equal parts of water and antifreeze compound. This mixture ensures the best possible ratio between cooling performance and anti-corrosion protection.
- ► Do not fill coolant too quickly. Fill in a maximum of five liters per minute. If the coolant is added too quickly to the cooling system, air bubbles can be trapped in the cooling system and cause engine overheating.

Preparation for maintenance In the engine compartment

1. Park the vehicle on a stable, level and dry surface.
2. Secure the vehicle with the parking brake.
3. Lower the loader unit to the ground.
4. Switch off the ignition and remove the key.
5. Let the engine cool down.
6. Open the engine hood.

8.5.4.1 Check the coolant level

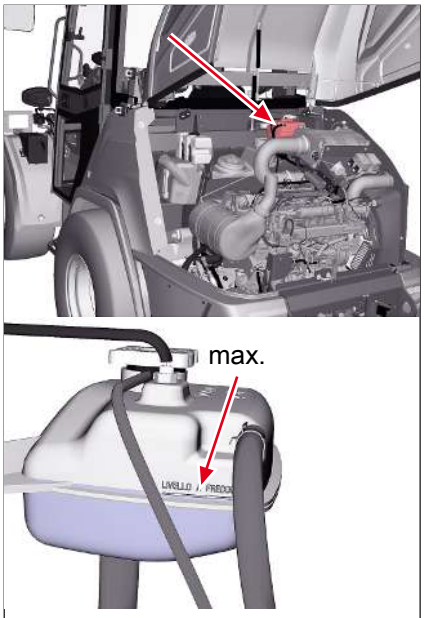

Fig. 206: Expansion tank for coolant

Check coolant level at regular intervals.

Ensure that sufficient antifreeze compound is always added to the coolant, even in summer. The antifreeze compound prevents internal corrosion of the radiator and engine.

Check the coolant level in the expansion tank in the engine compartment. The level must be between the MIN and MAX marks.

8.5.4.2 Refill coolant



⚠ WARNING

Risk of scalding due to hot coolant!

The cooling system is under pressure after switching off the engine. The coolant has heated up and expanded. When the fill opening is opened, the pressure escapes and hot liquid can splash out. Severe scalding can occur.

- ► Never open the fill opening when the engine is hot or the cooling system is under pressure.
- ► Allow engine to cool sufficiently.
- ► Wear protective equipment.



NOTICE

Technical damage due to insufficient filling level!

- ► Check or refill the filling level according to the service intervals specified in these operating instructions.
- ► Add coolant when the symbol appears on the display between service intervals.

8

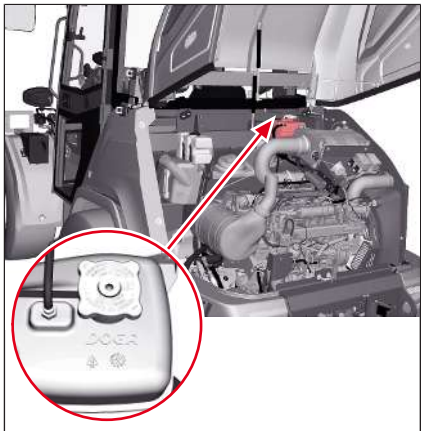

Fig. 207: Filler opening for coolant

If the coolant level is below the MIN mark, the coolant must be refilled at the filler opening **1**.

✓ Preparations for maintenance in the engine compartment were carried out.

✓ Protective equipment is on.

1. Open the cover of the filler opening for coolant.
2. Refill coolant until the MAX mark is reached.
3. Close the filler opening for coolant.

Environment

Possible environmental damage.

► Avoid release of antifreeze compound and coolant.

► Collect antifreeze compound and coolant and dispose of in an environmentally friendly manner.

8.5.4.3 Checking antifreeze compound



Fig. 208: Check antifreeze

The antifreeze compound prevents the coolant from freezing at sub-zero temperatures and protects the engine block and radiator from internal corrosion. Under normal conditions an antifreeze compound content of -20 °C to -30 °C is sufficient. The antifreeze concentration can be checked with an antifreeze tester.

Coolant compound table

Outside temperature [1]	Water content	Antifreeze compound [2]
-37 °C	50 %	50 %

1) Use the 1:1 concentration for warm outside temperatures, too, to ensure protection against corrosion, cavitation, and deposits.

2) Do not mix the coolant with other coolants.

8.5.5 Hydraulic oil level

NOTICE

Damage to hydraulic system due to incorrect fill level!

► The hydraulic oil level must never fall below the MIN mark on the oil dipstick.

► When filling, never exceed the MAX mark on the oil dipstick.

► Check fill level regularly.

► Do not use the vehicle if the fill level is not correct.

NOTICE

Damage to the hydraulic system due to incorrect or contaminated hydraulic oil!

- ► Only use approved hydraulic oil.
- ► Oil turbidity means that there is water or air in the hydraulic system which can damage the hydraulic oil pump. Have the problem only rectified by an authorized service center.
- ► Do not use the vehicle until the fault has been rectified.

Preparation for maintenance In the engine compartment

1. Park the vehicle on a stable, level and dry surface.
2. Secure the vehicle with the parking brake.
3. Lower the loader unit to the ground.
4. Switch off the ignition and remove the key.
5. Let the engine cool down.
6. Open the engine hood.

8.5.5.1 Checking hydraulic oil level

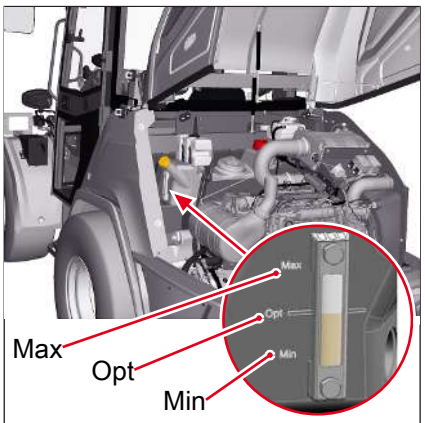

Fig. 209: Oil sight glass on the hydraulic oil tank

The hydraulic oil tank is located under the hood. There is a oil sight glass on the left of the hydraulic oil tank for checking the oil level.

✓ Preparations for maintenance in the engine compartment were carried out.

- Check the hydraulic oil level in the gauge glass on the hydraulic oil tank.

⇨ The hydraulic oil level must be visible in the middle of the oil sight glass.

The hydraulic oil level must not be below the red mark at the bottom of the oil sight glass. In this case, refill hydraulic oil until the hydraulic oil level is correct again. The hydraulic oil level must not be above the mark at the upper end of the sight glass. In this case, drain the hydraulic oil until the hydraulic oil level is correct again.



Fig. 210: Breather filter for the hydraulic oil reservoir

Breather filter for the hydraulic oil reservoir

The breather filter ensures the ventilation of the hydraulic oil reservoir when the hydraulic oil level varies. The breather filter contains a filter element that prevents dust and dirt from entering and squirts of oil from escaping. There is a valve in the breather filter that holds the tank under light pressure. This pressure escapes when the hydraulic oil filler neck is opened.

8.5.5.2 Refill hydraulic oil

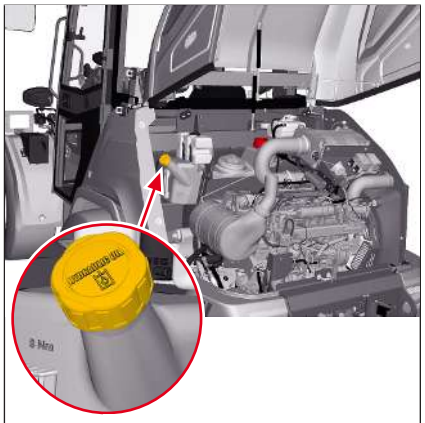

Fig. 211: Hydraulic oil filler opening

If no or too little hydraulic oil is visible in the inspection window, hydraulic oil must be topped up.

✓ Check hydraulic oil level.

1. Open the cover of the filler opening (turn counterclockwise).
2. Add hydraulic oil.
3. Check fill level of hydraulic oil.
4. Close the cover of the filler opening (turn clockwise).

8.5.5.3 Bleeding the hydraulic system



⚠ WARNING

Injury hazard due to uncontrolled movements of the loader unit!

Air inclusions in the hydraulic system can cause uncontrolled movements of the loader unit due to pressure loss. This may result in accidents that could result in serious injury or death.

- ► Bleed the hydraulic system in case of malfunctions of the hydraulic system or after longer downtimes.
- ► Bleed the hydraulic system only from the seat.
- ► Bleed the hydraulic system only when the vehicle is at a standstill.
- ► Ensure that there are no persons in the danger zone.

✓ The filling level in the hydraulic oil tank is correct.

1. Sit down on the operator seat.
2. Start the engine of the vehicle and let it idle for a few minutes.
3. Completely retract and extend the piston rods of all hydraulic cylinders several times using the joystick.
4. Actuate the steering system in both directions as far as it will go. Repeat this procedure until the steering system works correctly and without noise.
5. Check the fill level in the hydraulic oil tank and top up hydraulic oil if necessary.

8.5.6 Check the brake fluid level



⚠ WARNING

Accident hazard due to malfunctioning brakes!

The braking system is a safety device. Improper maintenance can lead to failure of the braking system. This may result in accidents that could result in serious injury or death.

All repair work on the braking system may only be carried out by trained personnel at an authorized service center.

- ► Check the brake function once a day.
- ► If the brake fluid level drops between two checks or the warning light comes on, there is a defect in the brake system.
- ► Do not operate the vehicle with malfunctioning brakes.
- ► Perform service according to the service intervals.

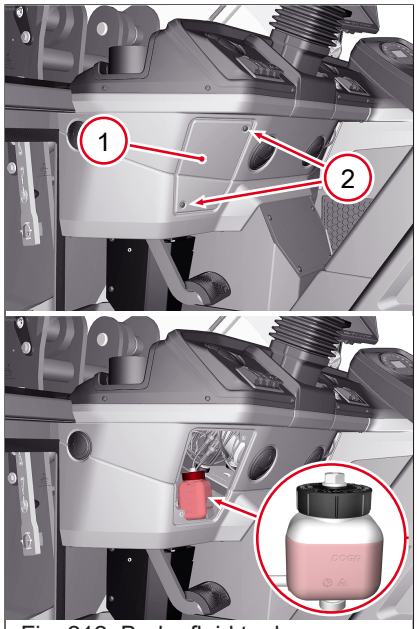

Fig. 212: Brake fluid tank

Check the brake fluid

The brake fluid level is monitored by a switch in the tank. If the brake fluid level is too low, the following information appears on the display:

Symbol	Meaning
	The “Vehicle electronics” warning light illuminates continuously. A warning tone also sounds.
	The symbol appears on the display.

The container is accessed by removing the cover **1**. To remove the cover, unscrew the screws **2**. After checking the brake fluid level, reattach the cover.

If the brake fluid level in the tank has dropped too low, do not drive the vehicle further. Only drive the vehicle again after it has been inspected and approved by an authorized service center.

8.5.7 Windshield wiper water level

The windshield wiper reservoir is located to the left of the driver's seat in the cab.

Make sure that the windshield wiper reservoir always has enough fluid in it. Add only clean tap water. Add a suitable window cleaner if necessary. During winter, add antifreeze to the water.

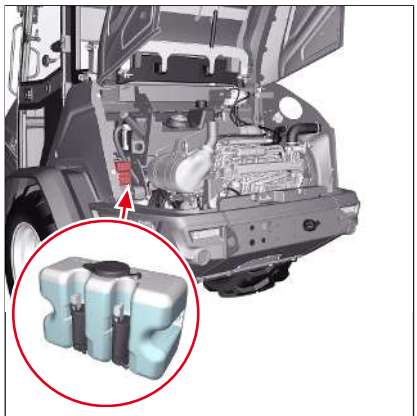

Fig. 213: Position of the tank for window wiper reservoir

Check the windshield wiper water level and refill

✓ Park the vehicle on a stable, level and dry surface.

1. Secure the vehicle with the parking brake.
2. Lower the loader unit to the ground.
3. Switch off the ignition and remove the key.
4. Open the engine hood.
5. Check the level of the windshield wiper water in the reservoir.

Refilling the windshield wiper water if necessary:

1. Open the fill opening in the reservoir.
   ⇨ Use filling aid, e.g. hose, if necessary.
2. Fill with water, if necessary mixed with window cleaner or antifreeze compound.
3. Close the fill opening.

8.6 Lubricating the vehicle and attachment

8.6.1 Lubricating the vehicle

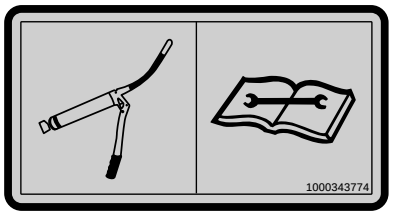

Fig. 214: Label: Lubricate lubricating points

There are various lubrication points on the vehicle which must be lubricated every 20 operating hours with water-resistant multi-purpose lubricant. The following lubrication plan shows the lubrication points on the vehicle.

The number of grease nipples is indicated in square brackets under the lubrication plan. E.g.**1**trailer coupling automatically[1]
means,that there is a grease nipple in position 1 at the trailer coupling.

Depending on the equipment variant, the number of grease nipples may vary. If different numbers of grease nipples are possible, the number is shown as follows: [1]/[2].
The standard version has one grease nipple, the variant has two grease nipples.

In the case of remote lubrication, the grease nipple is not attached directly to the point to be lubricated, but at an easily accessible point and connected to the lubrication point by a hose.

When lubricating, check the bearings of the load system and the hydraulic cylinder. Worn bearing bushings must be replaced by an authorized service center.

Lubricate moving parts without grease nipples such as hinges, levers, Bowden cables, etc. with the oil can.

Preparation for lubrication

1. Park the vehicle on level ground.
2. Activate parking brake.
3. Only raise the load system until all grease nipples can be accessed without any risk.
4. Stop engine and remove starting key.

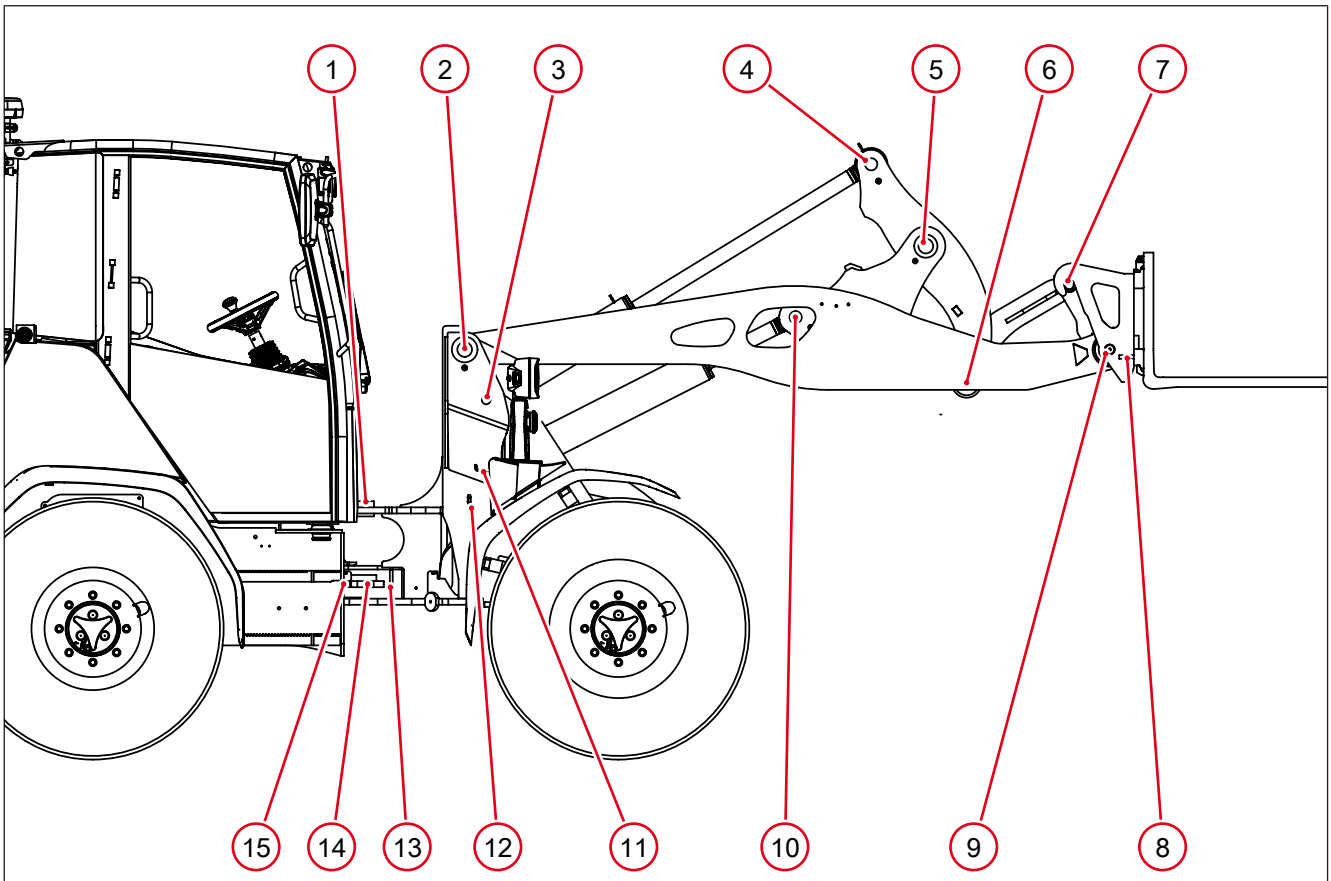

Fig. 215: Lubrication plan

Lubrication point and number [x]		
1	Bearing of the central joint at the top front	[1]
2	Bearing of loader unit	[2]
3	Bearing of tilt cylinder rear	[1]
4	Bearing of tilt cylinder front	[1]
5	Bearing of large return lever	[1]
6	Bearing of drawbar rear	[1]
7	Bearing of drawbar front	[2]
8	Bolt of hydraulic lock bolt for attachments	[2]
9	Pivot point of quickhitch	[2]
10	Bearing of lifting cylinder front	[2]
11	Bearing of lift cylinder rear	[2]
12	Front steering cylinder bearing (remote lubrication	[1]
13	Bearing of steering cylinder rear	[1]
14	Bearing of the central joint bottom	[1]
15	Bearing of the central joint at the top rear (remote lubrication)	[1]

8.6.2 Central lubrication system

The central lubrication system automatically lubricates the vehicle's lubrication points periodically. The integrated electronic control unit has a data memory. for saving the times that have been set or that have elapsed.

The time is taken and saved if the ignition is switched off during lubrication or during a break. The remaining lubrication time or break time is read from the memory upon switching the ignition on again, and lubrication is resumed where it was interrupted.

Lubrication time control



NOTICE

Water penetrating into the controls of the central lubrication system can destroy them!

► Always close the lid of the central lubrication system correctly.

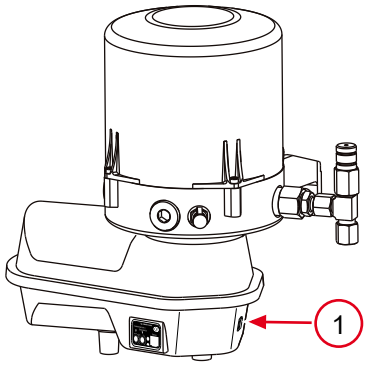

Fig. 216: Switch for intermediate lubrication

Break and lubrication times can be set with the time-dependent control of the central lubrication system. Break times are the periods between two lubrication times.

When the ignition is switched on, intermediate lubrication can be triggered at any time by actuating switch **1** on the side of the pump. This intermediate lubrication can also be used as a functional check.

The pump then immediately starts with a lubrication cycle. The lubrication or break time that has elapsed so far or that has been saved is reset and starts over again.

A fault in the central lubrication system can also be reset by pressing switch **1**. The pump restarts a lubrication cycle.

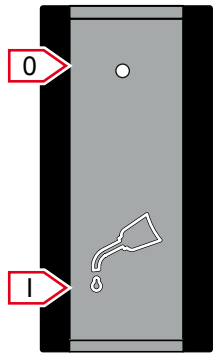

Fig. 217: Start lubrication with switch

Start lubrication manually with switch

The vehicle may be equipped with the switch shown in the cab. The switch is located in the switch panel in the side console and has two switch positions. The switch can be used to manually activate intermediate lubrication between automatic lubrication operations from the seat.

1. Move switch to position **I** and hold.
   ⇨ Intermediate lubrication is started.
2. Release switch.
   ⇨ Switch returns to position **0**.

After actuating the switch, a complete lubrication cycle is carried out.

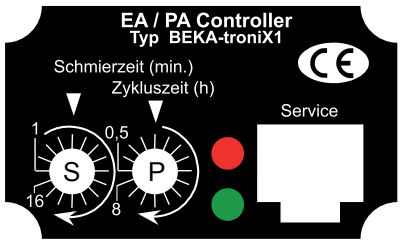

Fig. 218: Operation of the central lubrication system

Lubrication times and break times

The break time and the lubrication time are set by means of ratchet switches **S** and **P** in the control viewing window.

1. To set the time, remove the frame on the pump of the central lubrication system with a flat screwdriver.
2. Loosen exposed screws.
   ⇨ Remove the cover.
3. Set the pause time **P** and lubrication time t **S** with a flat screwdriver.
4. Reinstall the protective cover and frame.

Lubrication time **S** can be adjusted between one and 16 minutes. There are 16 detents of one minute each available for this purpose.

Break time **P** can be adjusted between 30 minutes and eight hours. There are 16 detents of 30 minutes each available for this purpose.

The LEDs signal different operating states of the central lubrication system.

- When the ignition is switched on, both self-test LEDs light up for 1.5 seconds.
- During the lubrication process, the green LED lights up permanently.
- If faults occur in the central lubrication system, the red LED flashes.

The original operator's manual for the central lubrication system must for the central lubrication system must be observed. This is included with the vehicle or can be downloaded via a QR code on the central lubrication system.

Repair work



NOTICE

Damage to the vehicle due to non-lubricated lubrication points!

If lubricant escapes at the central lubrication system, one or more lubrication points are not lubricated.

► Have the error repaired by an authorized service center.

Repair work on the central lubrication system may only be performed by authorized service centers!

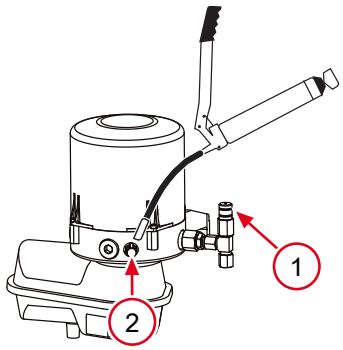

Fig. 219: Filling up the central lubrication system

Filling up the central lubrication system

The central lubrication system can be filled via grease nipple **2** or via a filling coupling with manually operated or pneumatic grease gun.

8.6.3 Lubricating the attachments

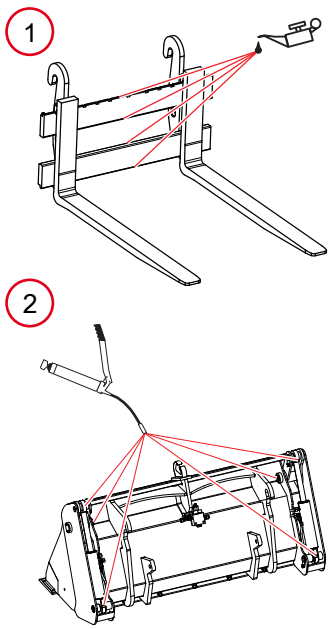

Fig. 220: Lubrication points of the attachments

Item	Designation
1	Pallet fork
2	4-in-1 bucket

Correct maintenance and service is absolutely necessary for smooth and continuous operation, and for a long service life of the attachments. The lubrication, maintenance and care instructions in the corresponding operator's manual for the attachments must be observed.

Clean attachments after use and check for damage. Have any damage repaired by an authorized service center. Do not work with damaged attachments.

Grease all lubrication points on the attachment weekly or every 20 operating hours with water-resistant multi-purpose grease. Lubricate all other moving parts with an oil can.

8.6.4 Greasing the trailer coupling

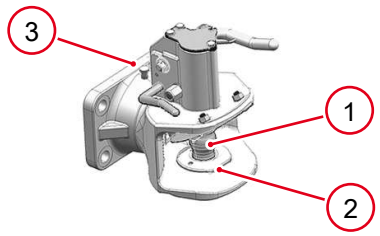

Fig. 221: Greasing the trailer coupling

In order to ensure the correct function of the trailer coupling, coupling pin **1** must be closed when cleaning with a high-pressure cleaner.

1. Close the trailer coupling.
2. After cleaning, lubricate coupling pin **1** and base ring **2** with tough, water-resistant multi-purpose grease.
3. Grease the grease nipple **3** on the swivel joint.

8.7 Cleaning and care

8.7.1 Information on cleaning and care



NOTICE

Damage to vehicle due to cleaning work!

- ► When cleaning the vehicle, pay particular attention to the underside of the vehicle. Do not allow dirt to collect on the engine or gearbox.
- ► Do not clean sensitive electrical components such as alternators, fuse boxes, control levers, etc. with a high-pressure cleaner.



Environment

Avoid environmental damage!

► Clean the vehicle in a suitable place where the dirty waste water can be collected in an environmentally friendly manner.

► Collect contaminated water and dispose of it in an environmentally friendly manner.

Information on cleaning work

- Rubber parts and electrical components must not be cleaned with solvents or steam. Water can cause short circuits in the electrical system and cause new hazards.
- Do not use solvents that give off harmful or flammable vapors.
- Avoid skin contact with cleaning agents!
- Wear protective equipment.

When cleaning the vehicle with a high-pressure cleaner, observe the following:

- Maximum water pressure 130 bar.
- Maximum water temperature 80 °C.

In order to avoid damage to labels, door, window seals and other sensitive parts, do not hold the nozzle of the high-pressure cleaner too close to the vehicle.

Preparations for cleaning

1. Park the vehicle on firm and level ground.
2. Activate parking brake.
3. Place the loader unit on the ground using the attachment without applying pressure.
4. Switch off the ignition and remove the key.

8.7.2 Cleaning the vehicle from the outside



NOTICE

Damage to vehicle due to cleaning work!

The cab and electrical components are rain and splash-proof.

When cleaning with a high-pressure cleaner or steam jet, vehicle components may get damaged by the high pressure of the water jet.

► Do not expose door and window seals to the water jet of a high-pressure cleaner.

► When cleaning, do not hold the high-pressure cleaner too close to the radiator fins.

► Do not hold the high-pressure cleaner too close to the radiator fins when cleaning.



NOTICE

Damage due to rusting on paintwork, joints, screwed connections, etc.

A salty environment can promote rust formation on the paintwork, joints, screw connections, etc.

► Clean the vehicle thoroughly with water after any travel on saline ground conditions or roads and going to a different site!

The following aids are recommended for cleaning:

- Water with soap solution
- Sponge, brush
- Compressed air

Clean the vehicle from the outside

1. Clean the outside and underside of the vehicle with a high-pressure cleaner.
2. Clean the notice and warning labels.
3. Ensure that the engine and gear unit are free of dirt.
4. Clean mud flaps,mudguards and tire treads.
5. Clean cab windows and mirrors.

8.7.3 Cleaning the cab



NOTICE

Damage to controls and vehicle electrics/electronics

Cleaning with water under high pressure can damage seals and disable controls. Water under high pressure can penetrate the vehicle electrics/electronics and lead to a short circuit.

► Do not clean the inside of the cab with a high-pressure cleaner, steam jet or strong water jet.

The following aids are recommended for cleaning:

- Broom
- Vacuum cleaner
- Damp cloth
- Bristle brush
- Water with mild soapy water

Cleaning the seat belt

1. Check seat belt for dirt and damage.
2. Clean the seat belt when installed with mild soapy water. Do not use chemicals for cleaning as they destroy the fabric.
3. Have defective seat belts replaced immediately by an authorized service center.

8.7.3.1 Clean the pedals and the floor area

1. Clean pedals thoroughly.
2. Clean the floor area under the pedals.
3. Thoroughly clean the inside of the foot area.

8.7.3.2 Check/replace cab breather filter

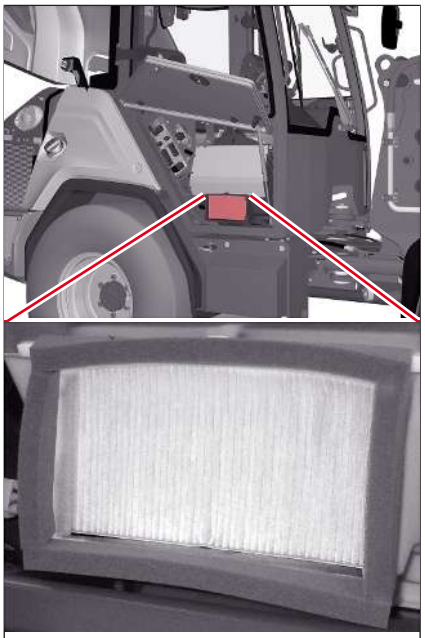

Fig. 222: Breather filter of the cab

The suction air for the cab ventilation is cleaned through the filter.

Check/clean breather filter weekly. For cleaning, lightly tap the filter or blow it out carefully with compressed air.

Change breather filter annually. Replace more frequently if the vehicle is used for dusty applications. Only use original breather filters from the vehicle manufacturer.

The external ventilation filter is located in the cab behind the maintenance flap.

1. Open the maintenance flap.
2. Pull out filter.
3. Clean the filter or insert a new filter.
4. Close the maintenance flap.

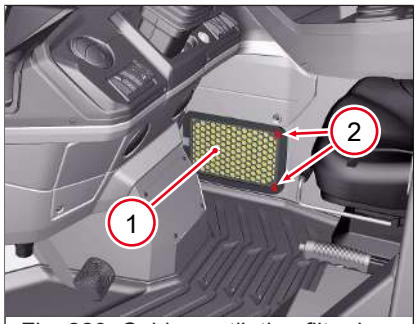

Fig. 223: Cabin ventilation filter inside

The interior ventilation filter is located in the cab on the right in the footwell.

✓ Cab door is opened.

1. Unscrew knurled screws **2**.
2. Fold away the cover frame.
3. Remove cover grille **1**.
4. Pull out the interior filter.
5. Clean the filter or insert a new filter.
6. Insert the cover grille.
7. Screw on the cover frame with the knurled screws **2**.

8.7.4 Clean engine and engine compartment



⚠ WARNING

Injury hazard due to hot and rotating parts!

When the engine is running and for a short time thereafter, parts in the engine compartment may still be hot or rotate. This may cause crushing which may result in serious injury or death.

- ► Do not open the engine cover if the engine is running.
- ► Let the engine cool down.
- ► Wear protective equipment.



NOTICE

<otor damage due to moisture in electronics after cleaning!

When cleaning the engine with a water or steam jet, the moisture penetrating the electronics causes it to fail and leads to engine damage!

- ► Do not clean electrical transducers such as temperature and oil pressure switches or control units with a high-pressure cleaner.
- ► Protect electrical parts, e.g. three-phase generators, cable connectors, relays, etc. from moisture.

Clean engine and engine compartment

- ✓ Engine is stopped and secured against starting.
- ✓ Engine has cooled down.
- ✓ Electrical components are protected from water.
- ✓ Preparations for cleaning carried out.

1. Clean the engine and engine compartment carefully with a water jet.
2. If electronic components in the engine compartment have come into contact with water, then dry them with compressed air and spray them with contact spray.

8.7.5 Radiator

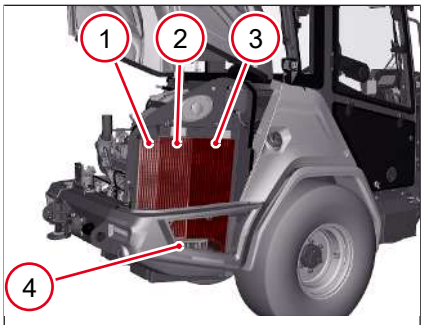

Fig. 224: Radiator in engine compartment

Item	Designation
1	Charge-air cooler:
2	Hydraulic oil cooler
3	Engine radiator
4	Fuel cooler

The radiators are located in the engine compartment and are accessed by opening the engine hood.

If the vehicle is equipped with an air conditioning system, the air conditioning condenser is mounted in front of the combination cooler.

If the vehicle becomes too hot during prolonged work operation or high outside temperatures, check the following points.

- Is there sufficient coolant in the radiator?
- Has the mixing ratio of the coolant been observed?
- Are the radiators and the spaces between the radiator fins clean and not blocked?
- Are all seals fitted around the radiator?
- Does the fan's hydraulic drive work?

8.7.5.1 Clean the radiator



NOTICE

Risk of technical damage!

► The higher the dust content in the circulating air, the more frequently all radiators must be checked and cleaned.

► Always cover up the intake connection of the air filter before cleaning.

► Do not damage the fins when cleaning the radiator.

► Carefully straighten bent fins.



Environment

Avoid environmental damage!

► Clean the vehicle in a suitable place where the dirty waste water can be collected in an environmentally friendly manner.

► Collect contaminated water and dispose of it in an environmentally friendly manner.



Fig. 225: Clean radiator with compressed air

Clean dirty radiator with compressed air. Heavily soiled radiators can also be cleaned with water and low pressure.

Clean the following components:

- Engine radiator
- Hydraulic oil cooler
- Intercooler
- Fuel cooler

8.7.6 Clean the air conditioning condenser



NOTICE

Damage to the engine due to overheating when equipped with an air conditioning system!

If the vehicle is equipped with air conditioning, the condenser must be removed to clean the radiator and condenser of the air conditioning system.

► Handle the condenser with care. The condenser fins are very sensitive and can be easily damaged.

Preparation for maintenance In the engine compartment

1. Park the vehicle on a stable, level and dry surface.
2. Secure the vehicle with the parking brake.
3. Lower the loader unit to the ground.
4. Switch off the ignition and remove the key.
5. Let the engine cool down.
6. Open the engine hood.

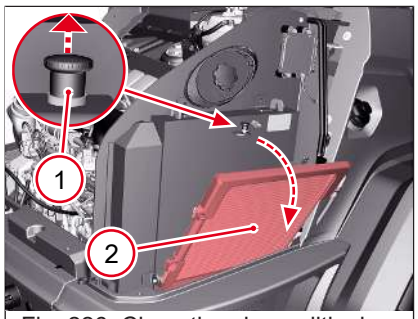

Fig. 226: Clean the air conditioning condenser

Dismantle the air conditioning system condenser

Item	Designation
1	Locking knob
2	Climate condenser

1. Pull the locking knob upwards.
2. Fold away the air conditioning condenser.

⇨ The radiator and condenser can now be cleaned.

Installing the condenser of the air conditioning system

1. Fold back the air conditioning condenser.
   ⇨ Air-conditioning condenser engages.
2. Check that the locking mechanism is secure.
3. Close the engine hood.

⇨ The vehicle is operational.

8.7.7 Cleaning the air filter

NOTICE

Damage to the engine caused by a dirty air intake system!

Engine damage can occur if the engine draws in dirty air.

- ► Perform maintenance on the air filter according to the maintenance intervals specified in this operator's manual.
- ► Do not let the engine run if parts of the air intake system are removed.
- ► Immediately replace damaged air filters.
- ► Do not operate the engine without an air filter element.

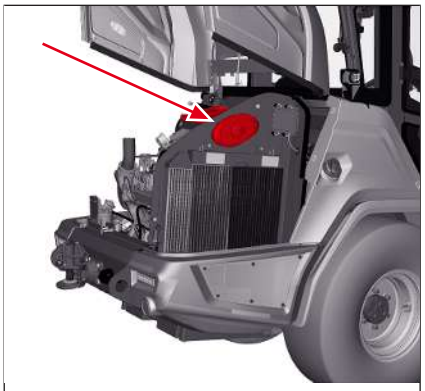

Fig. 227: Position of the air filter

The vehicle is equipped with an engine air filter for filtering the engine intake air. The air filter consists of a main filter and a safety filter.

Replace the main filter in time. If it is allowed to get too dirty, exhaust gas emissions will increase.

Preparation for maintenance In the engine compartment

1. Park the vehicle on a stable, level and dry surface.
2. Secure the vehicle with the parking brake.
3. Lower the loader unit to the ground.
4. Switch off the ignition and remove the key.
5. Let the engine cool down.
6. Open the engine hood.

8

8.7.7.1 Maintenance display for air filter

NOTICE

Technical damage due to dirty air filter!

- ► Perform maintenance on the air filter according to the maintenance intervals specified in this operator's manual.
- ► Clean or replace engine air filter if the symbol appears in the display between maintenance intervals.

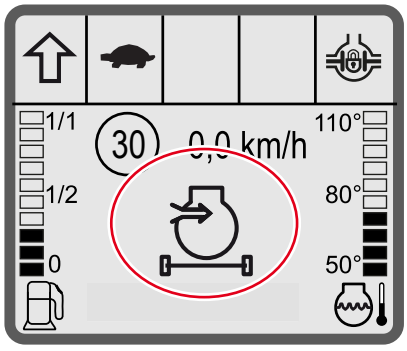

Fig. 228: Contamination indicator of the air filter

8.7.7.2 Removing and cleaning the main filter

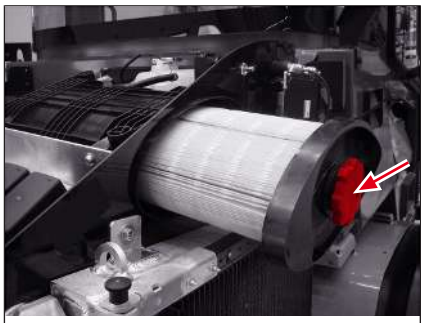
Fig. 229: Removing the main filter

Removing the main filter

✓ Preparations for maintenance in the engine compartment were carried out.

1. Loosen the lock on the lid by turning it counterclockwise.
2. Pull out the main filter.
   ⇨ The safety filter remains in the housing.
3. Clean the main filter with compressed air from the inside to the outside.
4. Replace the main filter if it is too dirty.

The main filter is installed in reverse order.

Secure the main filter by turning the closure on the cover to the right.

After cleaning the main filter, the symbol on the display must not appear when the engine is running. If this is still the case, replace the main filter.

8.7.7.3 Checking and replacing the safety filter



NOTICE

Technical damage from the incorrect assembly of the air filter!

► The safety filter must be firmly seated in the housing.

► Do not force the main filter into the housing.


Fig. 230: Remove safety filter

Remove safety filter

✓ Preparations for maintenance in the engine compartment were carried out.

1. Loosen the lock on the lid by turning it counterclockwise.
2. Pull out the main filter.
   ⇨ The safety filter can be seen now.
3. Pull out the safety filter.
4. Install a new safety filter.

The air filter is installed in reverse order. Make sure that the air filter is firmly seated in the housing. If the main filter is difficult to install, the safety filter is not correctly seated in the housing. The main filter may be damaged.

8.7.7.4 Check air intake line

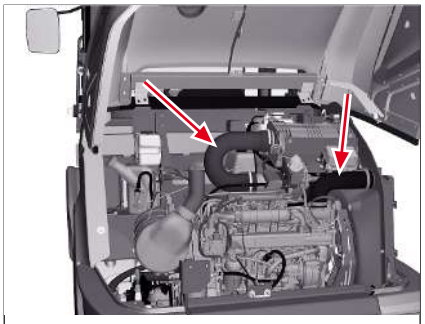

Fig. 231: Air intake hose

Check the air intake line between the air filter, charge intercooler and engine:

- The hoses must not be porous, cracked or damaged.
- The hoses must be firmly attached to the connecting pieces and must not slip off the pieces. The fastening clamps must be tightened firmly.

8.8 Braking system

8.8.1 Check service brake and parking brake



⚠ WARNING

Accident hazard due to malfunctioning brakes!

The braking system is a safety device. Improper maintenance can lead to failure of the braking system. This may result in accidents that could result in serious injury or death.

All repair work on the braking system may only be carried out by trained personnel at an authorized service center.

► Check the brake function once a day.

► If the brake fluid level drops between two checks or the warning light comes on, there is a defect in the brake system.

► Do not operate the vehicle with malfunctioning brakes.

► Perform service according to the service intervals.

Check the service brake function

✓ There must be no persons in the immediate vicinity of the vehicle.

▪ Carry out braking tests at low speed.

⇨ If the brake reacts differently than usual, stop the vehicle immediately.

⇨ Contact an authorized service center immediately.

Check the parking brake function

1. Drive the vehicle on an uphill/downhill slope.
   ⇨ Incline/descent must be between 10% and 20%.
2. Activate the parking brake and switch off the ignition.
3. Do **not** leave the seat and wait a minute.
   ⇨ The vehicle must not move.
   ⇨ If the vehicle rolls away, take the vehicle out of service.

⇨ Contact an authorized service center immediately.

Further activities on the braking system

All repair work on the braking system may only be carried out by trained personnel at an authorized service center. The only exceptions to this are the brake fluid check and the brake functional check.

8.9 Steering system

8.9.1 Check the steering



⚠ WARNING

Accident hazard due to steering system not working correctly!

Driving with a defective steering system can lead to accidents and injuries or death.

- ► Check that the steering system is working before starting a journey.
- ► Do not drive the vehicle if the steering system is defective.
- ► Have the steering system that is not working correctly repaired by a service center before continuing to drive the vehicle.

Check the steering system for proper function daily before starting vehicle travel. Proceed as follows:

1. Start the engine of the vehicle.
2. With the vehicle at a stand still, carry out uniform steering movements to the left and right up to the stop.
   ⇨ There must be no jerky movements or noises.

⇨ The steering system is operational.

Do not operate the vehicle if you detect jerky movements or noises. Contact an authorized service center immediately.

All maintenance work on the steering system must be carried out by trained personnel in an authorized service center.

8.9.2 Checking the steering column adjustment

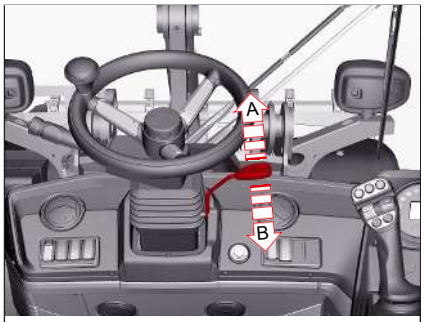

Fig. 232: Checking the steering column adjustment

1. Operate lever and hold.
2. Move the steering wheel once in all directions.
3. Release the lever.
   ⇨ The steering wheel is locked.
4. Check the lock by gently jerking.

8.10 Electrical system

8.10.1 Fuses

NOTICE

Damage to the vehicle electronics

Replacing fuses with the ignition switched on can cause errors in the electronic error memory.

► Switch off the ignition before replacing fuses.

The circuits are protected by different types of fuses and main fuses.

If one of the main fuses or one of the relays has blown, there is major damage. In this case, contact an authorized service center and have the fault rectified.

8.10.1.1 Fuses and relays under the maintenance flap

Fuses and relays are located under the maintenance flap on the right side of the cab. They become accessible by opening the maintenance flap.

Fuse box overview

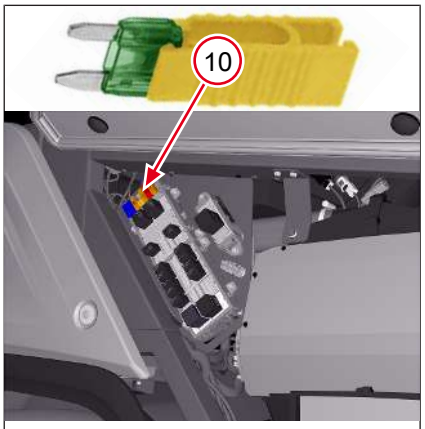

Fig. 233: Fuses under the maintenance flap

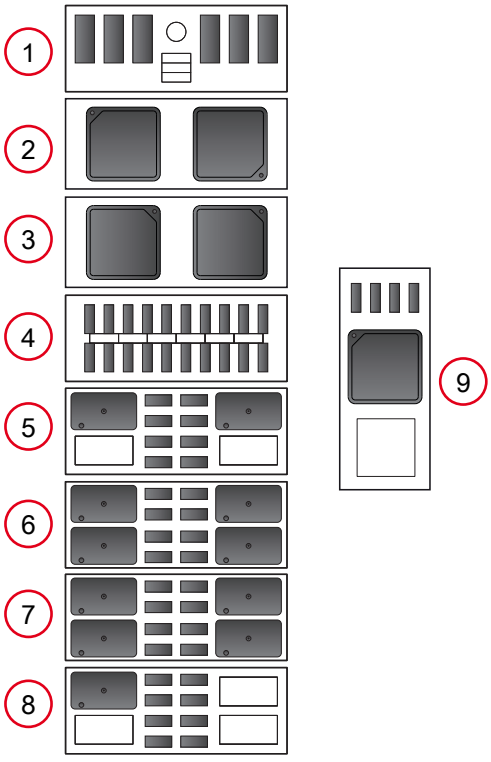

Overview of the fuses in the driver's platform

Bracket	Function
1	Fuses
2	Relay
3	Relay
4	Fuses

Bracket	Function
5	Relays and fuses
6	Relays and fuses
7	Relays and fuses
8	Relays and fuses
9	Relay
10	Fuse puller

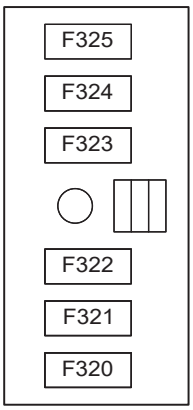

Fig. 234: Holder 1: Main fuses

Holder assignment 1

Main fuses

Item	Protected function	Ampere
F320	Terminal 15.1 cabin	60
F321	Terminal 15.2 cabin	60
F322	Reserve	---
F323	Main fuse lighting	40
F324	Main fuse lighting & option 14-pin. Socket	50
F325	Main fuse terminal 30	40

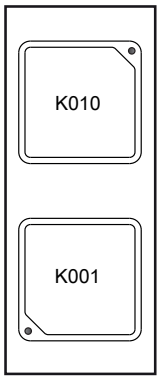

Fig. 235: Holder 2: Relay

Holder assignment 2

Relay

Item	Function
K010	Flashing light relay
K001	1. Relief relay terminal 15

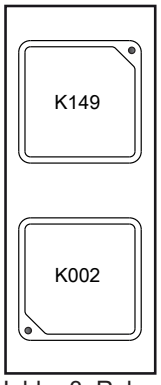

Fig. 236: Holder 3: Relay

Holder assignment 3

Relay

Item	Function
K149	Window wiper, interval relay
K002	2. Relief relay terminal 15

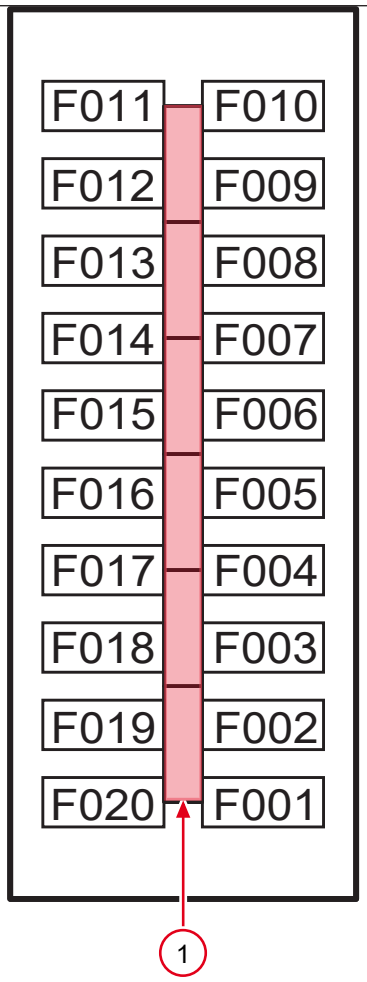

Fig. 237: Holder 4: Fuses

Holder assignment 4

Item	Protected function	Ampere
F001	Starter	7.5
F002	Back-up fuse travel drive	30
F003	OBD KL30, track unit, joystick terminal 30, CPU of the VCU, CPU control unit 14-pin socket, drive interlock	5
F004	Power VCU	10
F005	Power VCU	10
F006	Power VCU	10
F007	12-V socket, radio terminal 30	10
F008	Reserve	---
F009	Reserve	---
F010	Reserve	---
F011	Reserve	---
F012	Electrical function 1	5
F013	Electrical function 2	5
F014	Reserve	---
F015	Brake fluid expansion tank, telescopic sensors	5
F016	Terminal 15 DCU, terminal 15 OBD, Ignition Trackunit, terminal 15 control unit 14-pin Socket, terminal 15 VCU, multi-disc brake pressure switch	2
F017	Seat heating, compressor air suspension seat	15
F018	Switch lighting, switch activation 14-pin Socket, switch for DPF regeneration	5
F019	Steering column switch, window wiper front & rear	15
F020	Display, stability indicator	7.5

1 Reserve fuses

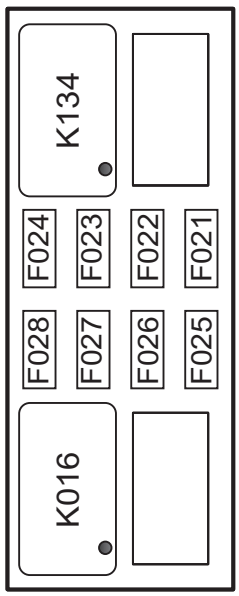

Fig. 238: Holder 5: Relay and fuses

Holder assignment 5

Relay

Item	Function
K016	Relay E-function 1
K134	Relay E-function 2

Fuses

Item	Protected function	Ampere
F021	12 V socket	25
F022	Reserve	---
F023	Reserve	---
F024	ECU Power Stage 1 additional controller 14-pin socket	10
F025	ECU Power Stage 2 additional controller 14-pin socket	10
F026	ECU Power Stage 3 additional controller 14-pin socket	10
F027	Hazard lights	15
F028	Turn signal indicator	10

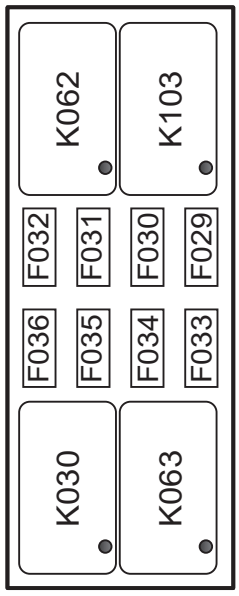

Fig. 239: Holder 6: Relay and fuses

Holder assignment 6

Relay

Item	Function
K030	Relay brake light
K062	Relay low beam
K063	Relay high beam
K103	Relay air conditioning system

Fuses

Item	Protected function	Ampere
F029	Back-up fuse, side marker light	15
F030	Marker light right	7.5
F031	Clearance lights, left, numberplate lights	7.5
F032	High beam	15
F033	Lighting for road travel	15
F034	Low beam left	7.5
F035	Low beam right	7.5
F036	Brake light	10

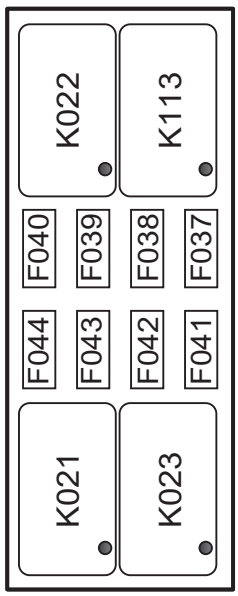

Fig. 240: Holder 7: Relay and fuses

Holder assignment 7

Relay

Item	Function
K021	Relay differential lock
K022	Load unit stabilizer relay
K023	Relay front wiper
K113	Relay Start

Fuses

Item	Protected function	Ampere
F037	Back-up warning generator, reversing camera monitor	7.5
F038	Reserve	---
F039	Fan of cab heater	20
F040	Radio terminal 15; USB charging socket	10
F041	Air conditioning system	7.5
F042	Central lubrication system	10
F043	Pressure relief 3rd control circuit, changeover valves for hydraulic options, load swing damping	15
F044	Differential lock	15

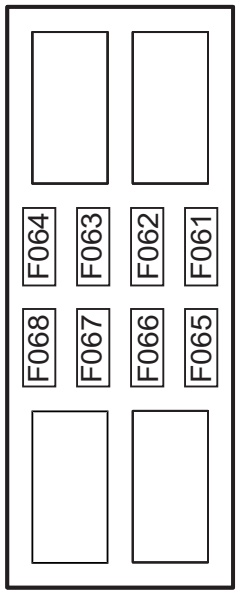

Fig. 241: Holder 8: Relay and fuses

Holder assignment 8

Relay

Reserve

Fuses

Item	Protected function	Ampere
F061	Reserve	---
F062	Work headlight front	10
F063	Work light rear	10
F064	Reserve	---
F065	Reserve	---
F066	Rotating beacon	7.5
F067	Reserve	---
F068	Reserve	---

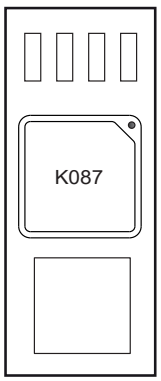

Fig. 242: Holder 9: Relay

Holder assignment 9

Relay

Item	Function
K087	Load unit stabilizer relay

8.10.1.2 Engine compartment fuses

Fuses and relays are located under the engine hood. They become accessible by opening the engine hood

Fuse box overview

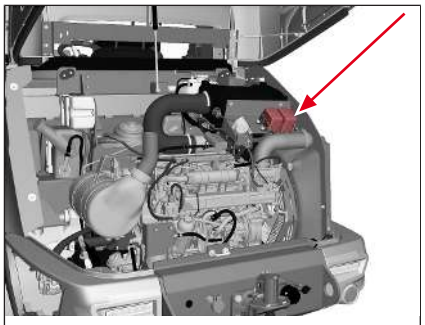
Fig. 243: Fuses under the engine hood

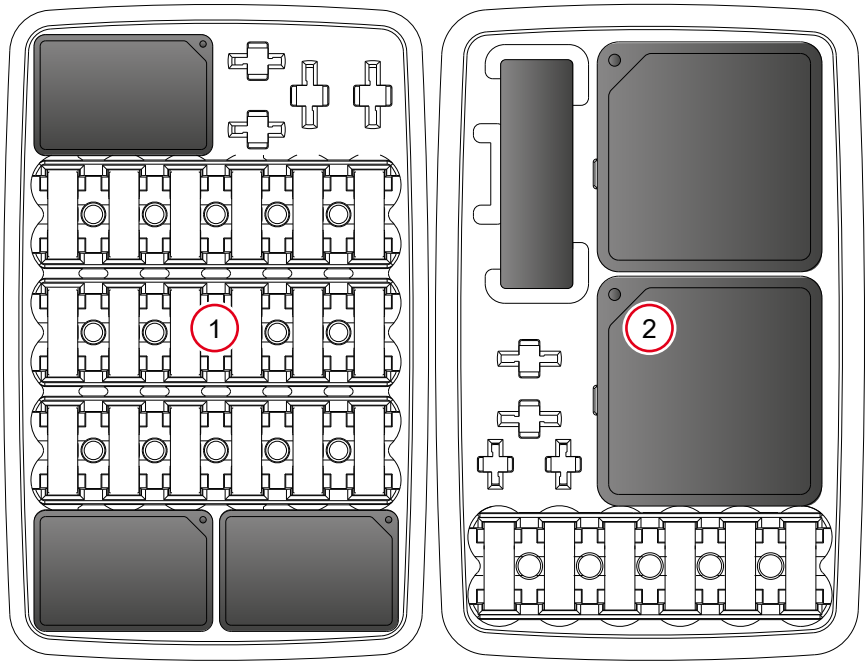

Overview of the fuses in the engine compartment

1 Holder 1: Relay and fuses

2 Holder 2: Relay and fuses

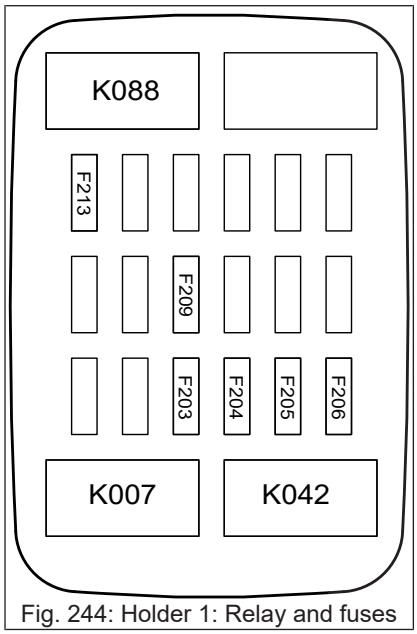

Fig. 244: Holder 1: Relay and fuses

Holder assignment 1

Relay

Item	Protected circuit
K007	Relay Start
K042	Relay engine power
K088	Fuel pump relay

Fuses

Item	Protected function	Ampere
F203	Engine electronics ECU	5
F204	Engine electronics Power	25
F205	Sensor technology engine	5
F206	Fuel pump	7.5
F209	Starter voltage supply	15
F213	EGR valve	5

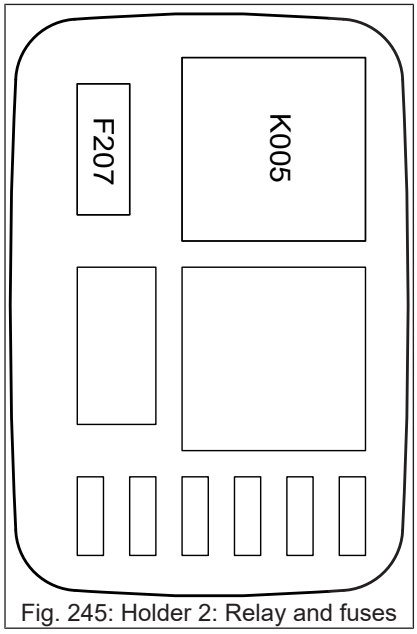

Fig. 245: Holder 2: Relay and fuses

Holder assignment 2

Relay

Item	Protected circuit
K005	Preheat relay

Fuses

Item	Protected function	Ampere
F207	Preheating ECU	50

8

8.10.1.3 Main fuses in the battery compartment

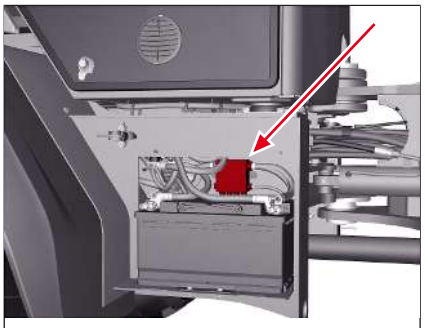
Fig. 246: Main fuses in the battery compartment

The main fuses are located in the battery compartment. They can be accessed by opening the battery cover. If one of these fuses is blown, the electrical system is more severely damaged.

In this case, contact an authorized service center.

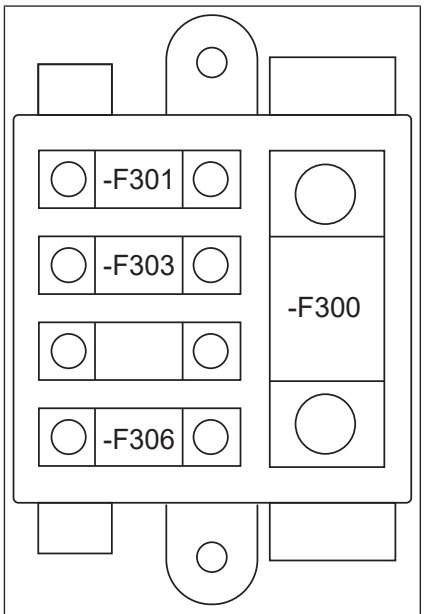

Fig. 247: Main fuses

Assignment of the main fuses

Item	Protected function	Ampere
F300	Starter	500
F301	Engine	100
F303	Cab	125
F305	14 pin socket (option)	60
F306	Generator	125

8.10.2 Checking the lighting

Switch on the following lights and check that they function correctly:

- Vehicle lights
  - Parking light
  - Low beam
  - High beam
  - Reversing lights and tail lights
  - Brake lights
- Hazard warning system and turn signal indicators
- Work lights:
  - Front cab work lights
  - Rear cab work lights
  - Work lights at the loader unit, if fitted
  - Rotating beacon, if fitted.

The lenses of the headlights and lamps must not be dirty or damaged. The reflectors in the headlights and lamps must reflect sufficiently.

Have defective lamps, damaged diffusing lenses and blunted reflectors replaced.

8.10.3 Checking window wiper and washer system

Replace wiper blades in good time if the wiper performance decreases.

The window wiper tank is located on the left-hand side of the rear of the cab.

Check window wiper system and washer system for function by actuating the following functions:

- Front window wiper:.
- Front washer system.
- Rear window wiper.
- Rear washer system.

8.10.4 Servicing the battery



⚠ WARNING

Caustic injury hazard due to battery acid!

Battery acid can cause serious burns in case of skin contact.

► Avoid contact of the battery acid with the skin, eyes and mouth.

► In case of contact with battery acid, immediately rinse the affected parts of the body with plenty of clear water and seek medical attention at once.

► Wear protective equipment.



⚠ WARNING

Explosion hazard due to batteries!

Batteries give off explosive gases that can cause deflagrations if ignited.

► Do not smoke, avoid fire and open flames.

► Do not place any tools or other metallic objects on the battery that could cause a short circuit.



NOTICE

Short-circuit in the electrical system due to incorrect sequence when connecting and disconnecting!

► Disconnecting: First the negative terminal, and then the positive terminal.

► Connecting: First the positive terminal, and then the negative terminal.

Information on batteries

- Always take off metal jewelry and watches before performing work on the battery or the electrical system.
- Dispose of old batteries in an environmentally friendly manner and separately from other waste.

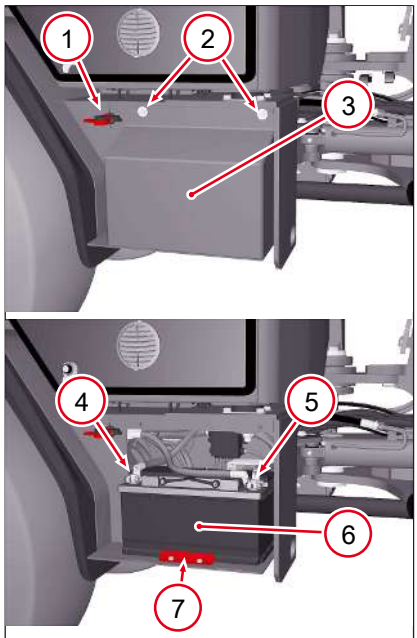

Fig. 248: Battery location

Removing the battery

Item	Designation
1	Battery master switch
2	Screws wrench size SW 13
3	Battery cover
4	Negative pole
5	Positive pole
6	Battery
7	Battery holder

Required tools: Wrench with 13 mm width across flats.

Wrench key size 17 mm

✓ Switch off the battery disconnect switch.

1. Unscrew battery cover
2. Unscrew the line from the negative terminal (-).
3. Unscrew the line from the positive terminal (+).
4. Unscrew the battery holder with a wrench.
5. Remove the battery.

The installation of a new battery takes place in reverse order. Do not overtighten the lines of the poles when screwing them on. Dispose of old batteries in an environmentally friendly manner and separately from other waste.

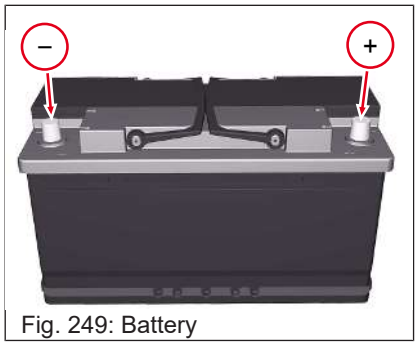

Fig. 249: Battery

Servicing the battery

Follow the operator's manual of the battery. The operator's manual of the battery is fastened on one side of the battery.

- Always keep the terminal heads of the battery and the terminals of the connecting cables clean and lubricate with anti-corrosion grease.
- Ensure that the cover of the positive terminal is always present and closed.

8.11 Working hydraulics

8.11.1 Check hydraulic hoses

Important information for the owner of the vehicle

Check the hydraulics hoses regularly for age and condition.

The owner of the vehicle must ensure that hose lines are replaced in appropriate intervals, even if no safety-relevant malfunctions can been detected on the hose line.

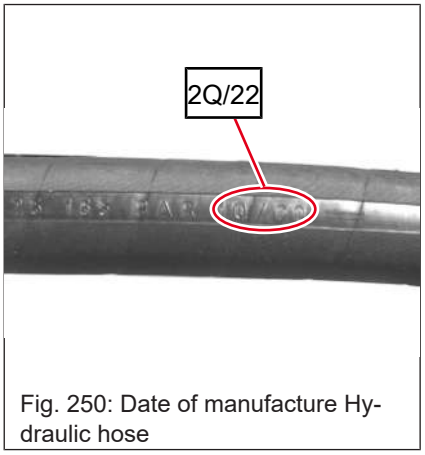

Fig. 250: Date of manufacture Hydraulic hose

- Have hose assemblies checked by an expert (qualified person) before they are put into operation for the first time and at least once a year thereafter for their safe working condition.
- Have leaks immediately repaired and damaged pressure lines replaced by an authorized service center.
- Have hydraulic hoses checked by authorized technically trained personnel at the recommended intervals.
- Adhere to the following test intervals:
  - With normal wear, every 12 months.
  - In case of increased wear (longer operating times, multi-shift operation, high outside temperatures etc.), every 6 months.
- In the event of visible defects, have hydraulic hoses and lines replaced by an authorized service center.

In this context, reference is also made to the "Safety rules for hydraulic lines" issued by the Central Office for Accident Prevention and Occupational Medicine and to prevailing standards such as DIN 20066, Tl.

The date of manufacture (month or quarter and year) is indicated on the flexible line.

Example:

- "**2Q/22**" indicates production in the 2nd quarter of 2022.

8.11.2 Checking the locking function for the joystick

Check the locking function of the joystick regularly. Carry out the function test only when the vehicle is at a standstill.

When the locking function is switched on, the loader unit must not move when the joystick is operated. If the loader unit does move, there is a technical defect which must be repaired by an authorized service center. Do not put the vehicle into operation.

To operate the joystick lock function, see Using the joystick lock function on page 126.

8.11.3 Check the lock of the attachments

Check the lock of the attachments at regular intervals. Carry out the function test only when the vehicle is at a standstill. If the lock is defective, do not operate the vehicle and contact an authorized service center.

To operate the lock, see Coupling attachments on page 131.

8.11.4 Check the hydraulic control circuits

A hydraulically operated attachment is required to control the hydraulic control circuits.

The following functions must be checked and functional:

- All available functions of the front hydraulic connections see operate front hydraulic connections on page 136.
- All available functions of the rear hydraulic connections see operate rear hydraulic connections on page 138.

8.12 Engine

8.12.1 Check and tighten the belt



NOTICE

Cracked and stretched belts cause engine damage!

- ► Service the belts according to the maintenance intervals in this operator's manual.
- ► Observe the operator's manual of the engine.
- ► Have the belts only replaced by an authorized service center.

Preparation for maintenance In the engine compartment

1. Park the vehicle on a stable, level and dry surface.
2. Secure the vehicle with the parking brake.
3. Lower the loader unit to the ground.
4. Switch off the ignition and remove the key.
5. Let the engine cool down.
6. Open the engine hood.

8.12.1.1 Engine KDI2504TCR

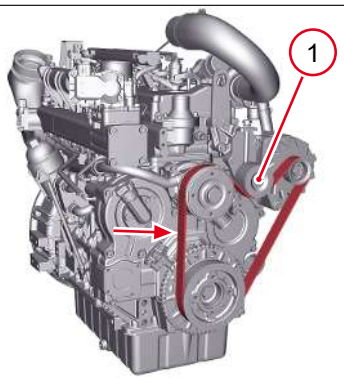

Fig. 251: Checking V-belt tension

Checking the belts

The belt is designed as a ribbed belt.

✓ Preparations for maintenance work in the engine compartment have been carried out.

1. Ensure that the ribs of the belt are correctly seated in the grooves of the pulleys.
2. Check by thumb pressure whether the belt cannot be pressed more than approx. 10 mm between the belt pulleys.
3. Check the belt for cracks, etc.

If cracks are visible or the belt tension is incorrect, have the belt replaced immediately by an authorized service center.

Belt tension

The belt is kept under tension with a tensioner pulley **1** . Check the tensioner pulley regularly for damage and that it is firmly seated: The tensioner pulley bearing must not have any play.

Have the tensioner pulley checked by an authorized service center and replaced if necessary if damage etc. is detected.

8.13 Cab

8.13.1 Checking the seat

A loose or defective seat can lead to accidents.

- Check the correct fastening of the seat, check the mounting screws.

⇨ The seat must not wobble or be able to be lifted.

- Check all seat adjustment positions and their locks.

⇨ When the locks are engaged, the seat may no longer move.

- Check seat suspension.

⇨ Suspension adjustment and suspension must function.

- Check seat upholstery.

⇨ The seat upholstery must not be worn or damaged.

If damage or defects are found, these must be repaired by an authorized service center before the vehicle is put into operation.

8.13.2 Check seat belt

Defective belts no longer fulfill their protective function and must be replaced.

- Check seat belt for dirt and damage.

⇨ Remove dirt if necessary.

⇨ The seat belt must not be damaged.

- Check the function of the roll stop.

⇨ If the seat belt is pulled with a jerking movement, the unrolling must stop.

- Check the retraction function of the seat belt.

⇨ The seat belt must retract automatically.

- Have the seat belt replaced by an authorized service center after an accident, even if there is no visible damage. Have the seat fastening and anchoring points checked for further load-bearing capacity.

If damage or defects are found, these must be repaired by an authorized service center before the vehicle is put into operation.

8.13.3 Check the operator presence switch

The operator presence switch is a safety component. If there is no one in the operator seat when the engine is running, the traveling drive and working hydraulics are deactivated after 5 seconds.

✓ Carry out check on open and safe terrain:

1. Sit down on the operator seat.
2. Start the engine.
3. Get up from your seat.
4. After 5 seconds, operate the loader unit with the joystick.

⇨ The loader unit must not make any movements.

If the loader unit should move despite the unloaded seat, there is a defect which must be repaired by an authorized service center.

8.13.4 Checking doors and windows

- Check door and windows.

⇨ The window panes must not be damaged.

⇨ The windows must fit tightly and securely in the seals and fastenings.

⇨ The window seals must not be damaged.

- Check the door and window locks: open, close and lock the doors and windows.

⇨ Doors and windows must engage and hold firmly and securely in the latches.

If damage and defects are found, these must be repaired by an authorized service center before the vehicle is put into operation.

8.13.5 Checking safety labels and information labels

- Check safety labels and information labels.

⇨ The labels must be legible and complete.

- If necessary, remove dirt.

If labels are no longer legible, damaged or missing, they must be replaced.

8.13.6 Checking heating, ventilation and air conditioning system

- Start the engine and put the heater, ventilation, air conditioning system in operation see Heating, ventilation and air conditioning system on page 122.

⇨ All functions must function correctly.

If damage and defects are found, these must be repaired by an authorized service center before the vehicle is put into operation.

8.14 Tires

8.14.1 Checking the tires

Checks that must be performed by the operator

Check the following conditions on the tires:

- Are there signs of damage to the tires or rims?
- Are the tires sufficiently and evenly filled with air on all four wheels?
- Is there sufficient profile on all four wheels?
- Check the lug nuts for correct seat and tighten if necessary.
- Remove any traces of oil or grease from the tires.
- Check for foreign bodies on the treads.

In case of doubt, contact an authorized service center.

8.14.2 Inflate tires



⚠ WARNING

Injury hazard due to bursting tires!

Inflating the wheels can cause accidents resulting in serious injury or death.

- ► Use only filling devices with calibrated pressure gages to inflate the tires.
- ► When inflating the tires, ensure that no one is in the danger zone.
- ► Fill the tires only with the filling pressure from the air pressure table.

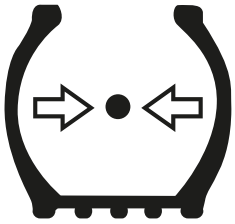

Fig. 252: Observe tire pressure symbol

These instructions refer to inflating tires after loss of pressure. Observe the air pressure prescribed for the tires of the vehicle see Air pressure table for approved tires on page 215.

If there is a complete loss of pressure, this work may only be carried out by an authorized service center.



Fig. 253: Tire pressure gauge

Preparation to inflate tires

✓ Air compressor, tire pressure gauge and compressed air hose are available and in working order.

1. Park the vehicle on a stable, level and dry surface.
2. Secure the vehicle with the parking brake.
3. Retract the loader unit and lower it to the ground.
4. Switch off the ignition and remove the key.

Inflate tires

1. Unscrew the protective cap from the tire valve.
2. Position the valve connection of the filling device on the tire valve so that it securely remains in place.
3. Pump up the tire to the prescribed pressure.
4. Remove the valve connection of the filling device from the tire valve.
5. Screw the protective cap onto the tire valve.

8.14.3 Air pressure table for approved tires



NOTICE

Incorrect tire pressure can damage the tires!

- ► Observe the tire manufacturer's instructions.
- ► Check tire pressure regularly.

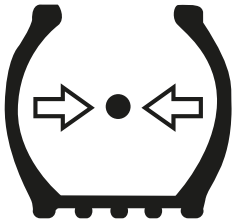

Fig. 254: Observe tire pressure symbol

Tires	Air pressure in bar
405/70R18 Alliance 608 ET0	3,9
400/70R20 Alliance 585 ET0	3,2
400/70R20 Michelin Bibl. ET0	3,9
405/70R20 BKT MP513 ET+30	3,5
445/70R19.5 Alliance 624 ET0	4,0
400/70R20 Michelin XMCL ET0	3,0

8.14.4 Changing wheels



⚠ WARNING

Danger of crushing if the vehicle slips off the jack during a wheel change!

Getting squeezed under the vehicle causes serious injury or death.

- ► Park the vehicle on firm, level, and horizontal ground.
- ► Use only a safe and suitable jack with sufficient lift capacity.
- ► Secure the vehicle with trestles.



⚠ WARNING

Danger to life due to improper installation!

Improper installation of tires and rims can cause accidents which can lead to serious or fatal injuries.

- ► Have assembly work performed by an authorized service center only.
- ► Welding and cutting the rims is prohibited.
- ► Replace damaged rims by new ones.



NOTICE

Damage to differentials due to different-sized wheels and tires!

- ► Only install wheels or tires on the vehicle from the same manufacturer, of the same size and that have the same wear condition.

Preparations for wheel change

1. Park the vehicle on a stable, level and dry surface.
2. Secure the vehicle with the parking brake.
3. Lower the loader unit to the ground.
4. Switch off the ignition and remove the key.

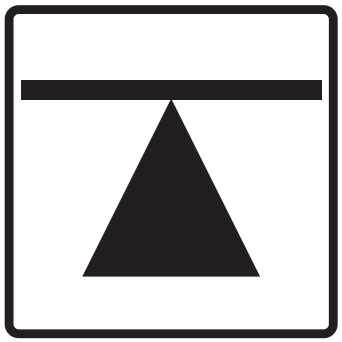

Fig. 255: Label Jack position

Changing wheels

1. Position the jack underneath the axle, next to the wheel to be changed.
   ⇨ The position at which the jack must be positioned is marked with the label next to it.
2. Ensure that the vehicle cannot slip off the jack. Secure the vehicle with additional supports if necessary.
3. Loosen the wheel bolts.
4. Lift the jack only until the wheel no longer touches the ground.
5. Unscrew the wheel bolts.

⇨ The wheel can be removed.

1. Position a new wheel.
2. Tighten the wheel bolts hand-tight.
3. Lower the jack.
4. Alternately tighten the opposite wheel bolts to the defined tightening torque.

⇨ Tighten the wheel bolts again after 2 operating hours. If necessary, repeat until the tightening torque no longer changes.

8.14.5 Tightening torques for wheels

Thread	Tightening torque
M22x1.5	600 Nm

9 Troubleshooting

9.1 Faults, causes, remedy

9.1.1 Information on malfunctions



⚠ WARNING

Risk of injury from ignoring a fault or error message

Ignoring a fault or error message can lead to accidents and injuries.

- ► In the event of faults or error messages that concern safety, take the vehicle out of operation immediately and secure it against being put back into operation.
- ► Do not restart the vehicle until the fault has been rectified by an authorized workshop.



NOTICE

Ignoring a fault or error message

Ignoring a fault or an error message can result in damage to the vehicle.

- ► If the fault cannot be rectified by the measures described, contact an authorized service center and have the fault or error rectified.

Repair work on the electrical systems and hydraulics of the vehicle may only be carried out by an authorized service center.

If a fault is to be reported to the authorized service center, have the error code displayed at hand:

9.1.2 Fault troubleshooting aids

The information in this chapter is intended to help you locate faults and identify them quickly and reliably so that they can be rectified.

Please contact your sales partner if the fault cannot be remedied.

Repairs may only be carried out by authorized service centers and trained personnel.

9.1.3 Possible errors and remedies on the engine

Error/fault	Possible cause	Remedy
Engine does not start	Parking brake not activated. Parking brake switch defective.	Apply the parking brake. Have the parking brake switch replaced.
	Starting speed to low.	Check and charge the battery. Check battery terminals for tightness.
	Starter is defective.	Contact an authorized service center.

Error/fault	Possible cause	Remedy
Engine does not start Engine stops during operation	Operator is not sitting on the seat. Defective operator presence switch.	Sit down on the operator seat. Have the operator presence switch replaced.
	Continuous operation of the hydraulic connections is switched on.	Switch off continuous operation of the hydraulic connections.
	Empty fuel tank.	Fill the tank and prime the fuel system if necessary.
	Fuel filter clogged. Paraffin deposits in winter.	Have the fuel filter changed. Use winter diesel.
	Leaking fuel line.	Tighten all screws and clamps.
Engine becomes too hot	The radiator is dirty	Clean the radiator
	Coolant fill level too low	Refill coolant
	Malfunctioning thermostat	Contact an authorized service center
	V-belt tension too loose, malfunctioning V-belt	Check V-belt tension and tighten if necessary. Take the vehicle to an authorized service center
	Seals in the area of the radiator are damaged or have been lost	Check the seals and have them replaced if necessary
	Visco coupling of fan defective	Check Visco coupling and have it replaced if necessary
Engine has too little power	Air filter soiled	Cleaning the air filter
	Fuel filter clogged Paraffin deposits in winter	Have the fuel filter changed Use winter diesel
	Leaking fuel line	Tighten all screws and clamps.
	Continuous operation of the hydraulic connections is switched on and operates against pressure	Switch off continuous operation of hydraulic connections

9.1.4 Possible errors and remedies on the traveling drive

Error/fault	Possible cause	Remedy
Engine is running but vehicle will not travel	Operator is not sitting on the seat, operator presence switch is defective.	Occupy the seat, get the operator presence switch replaced.
	Parking brake is applied	Release parking brake
	Parking brake switch defective	Contact an authorized service center
	Inching cartridge not in zero position	Contact an authorized service center
	The solenoids on the hydraulic pump are not receiving any electrical power	Check fuses, have the joystick and electrical system checked by an authorized service center
	Hand inching is activated	Handing inching is deactivated

Error/fault	Possible cause	Remedy
Vehicle does not have enough output	Inching is stuck	Contact an authorized service center
	Hand inching is activated	Handing inching is deactivated
	Continuous operation of the hydraulic connections is switched on and operates against pressure	Switch off continuous operation of the hydraulic connections.

9.1.5 Possible errors and remedies on the hydraulic system

Error/fault	Possible cause	Remedy
Hydraulic system overheats	Continuous operation of the hydraulic connections is switched on and operates against pressure	Switch off continuous operation of hydraulic connections
	The radiator is dirty	Clean the radiator
	V-belt tension too loose, malfunctioning V-belt	Check V-belt tension and tighten if necessary. Take the vehicle to a service center
	Hydraulic oil level not correct	Correct fill level of hydraulic oil
	Load too high	Reduce the load on the vehicle, take breaks
Engine does not have enough power	Hydraulic oil level too low	Search for leaks on the hydraulic system, add hydraulic oil
	Clogged hydraulic oil filter	Check hydraulic oil filter and if necessary have it checked/exchanged by a service center
	Continuous operation of the hydraulic connections is switched on and operates against pressure	Switch off continuous operation of hydraulic connections
	Hydraulic oil pump defective	Take the vehicle to a service center
	Hydraulic control valves defective	
	Hydraulic pressure relief valves misaligned or defective	

9.2 Fault indications

9.2.1 Acoustic warnings

A short warning tone indicates a serious error. A short warning tone is automatically acknowledged. The error is saved.

A continuous warning tone indicates a critical error. A continuous warning tone remains until it is acknowledged or reset. The error is saved.

Confirmation is made by pressing the buttons on the display.

9.2.2 Symbol for faults

Fault indications for the electronics

The vehicle display shows electronic faults with the following warning lights: (An error code may also be shown in position **1**.)

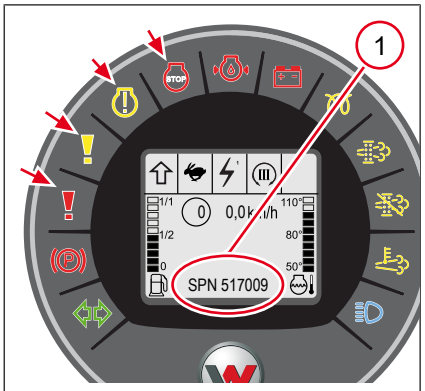

Fig. 256: Warning lights of the electronics in the display

Symbol	Meaning
	**Warning light for vehicle electronics** If the warning light lights up during operation, switch off the engine and switch on the ignition. • If no error code appears in the vehicle display: – Start the engine and resume vehicle travel. • If an error code appears in the vehicle display: Note the error code and contact an authorized service center.
	**Warning light for vehicle electronics** If the warning light lights up during operation, switch off the engine and switch on the ignition. • If no error code appears in the vehicle display: – Start the engine and resume vehicle travel. • If an error code appears in the vehicle display: Note the error code and contact an authorized service center.
	**Warning light for engine electronics** Illuminates or flashes if one or more engine-operation values are outside the normal range – stop the engine and switch on the ignition. • If no error code appears in the vehicle display: – Start the engine and resume vehicle travel. • If an error code appears in the vehicle display: Note the error code and contact an authorized service center
	**Warning light for engine electronics** Illuminates or flashes in case of one or more errors in the engine electronics. The engine switches itself off. If the engine does not switch itself off - turn it off. • If no error code appears in the vehicle display: – Start the engine and resume vehicle travel. • If an error code appears in the vehicle display: Note the error code and contact an authorized service center.

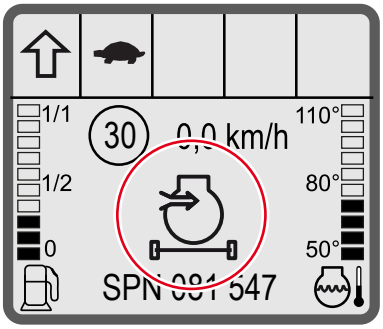

Fig. 257: Error messages in the display with symbol

Error messages with symbols on the display

Symbol	Meaning
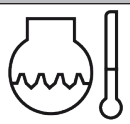	This symbol appears when the coolant temperature is too high.
	Symbol appears when the brake fluid level is too low.
	Symbol appears when the brake fluid level is too low.
	This symbol appears when the engine or hydraulic engine exceeds the permitted rotational speed.
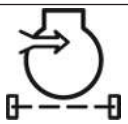	This symbol appears when the air filter contamination degree is too high.
	This symbol appears when the coolant level is too low.
	This symbol appears when the fuel line pressure is too low.
	This symbol appears when too much water has accumulated in the water separator on the fuel filter.
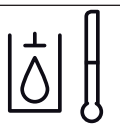	The symbol appears when the maximum permissible temperature of the hydraulic oil is reached.
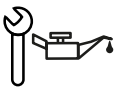	The symbol appears when the engine oil needs to be changed.
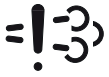	The symbol appears when an error has occurred in the exhaust aftertreatment.

9.2.2.1 Error codes

NOTICE

Technical damage due to failure to observe the error code! Failure to observe the error codes can cause serious technical damage!

In case of a malfunction during vehicle operation, the operating hours and engine speed readout is replaced by an error code.

- ► Proceed as specified in the error code table.
- ► Get in touch with a service center if the error persists in spite of proceeding as specified.
- ► Make a note of error codes that are not listed and inform the service center of them.

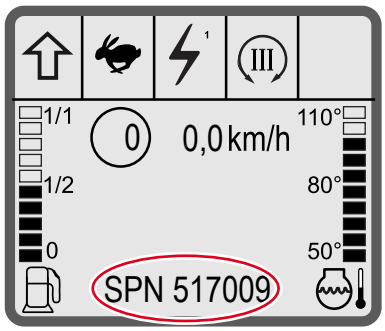

Fig. 258: Error codes in the display

If the vehicle electronics reports an error, an error code is shown in the display. Note down the error code before stopping the engine. Some error codes no longer appear after the ignition is switched off, although the error may still exist. If an error code appears that is not listed in the table,contact an authorized service center.

In the event of error messages from a vehicle component, an error code is output and saved. The stored error codes can be called in the display, see Error menu on page 84.

Error code	Error description	Measures
SPN0097 FMI2	Water in fuel	Water separator maintenance
SPN0107 FMI2	Air filter soiled	Cleaning the air filter
SPN0110 FMI0	Cooling temperature too high	Switch off the engine Check the radiator

10 Shutdown

10.1 Temporary shutdown

10.1.1 Putting the vehicle out of operation

The measures indicated below refer to putting the vehicle out of operation and back into operation again after a longer period of time.

- Stopping and securing the vehicle.
- Jack up the vehicle so that the tires do not touch the ground any more.
- Release parking brake.
- Lower the loader unit fully.
- Reduce the residual pressure in the hydraulic system and bring the operating levers to the zero position.
- Spray bare metal parts of the vehicle (e.g.: the piston rods of the hydraulic cylinders, if they are not retracted) with anti-corrosion agent.
- Preserve the engine.

10.1.2 Preserving the engine

Also observe the operator's manual of the engine!

- Clean the engine with a high-pressure cleaner in a suitable place.
- Bring engine to operating temperature.
- Drain the engine oil and dispose of it in an environmentally friendly manner.
- Fill anti-corrosion oil into the engine.
- Drain the fuel from the tank.
- Create a mixture of 90% fuel and 10% anti-corrosive oil and fill the fuel tank with it.
- Let the engine run ten minutes at idling speed and then stop it.
- Crank the engine several times by hand to preserve the cylinders and combustion chambers.
- Remove the fan belt and wrap it for storage protecting it from air and light.
- Spray an anti-corrosion agent onto the running surfaces of the pulleys.
- Close the intake and exhaust gas openings of the engine.

10.1.3 Storing the battery

- Remove the battery.
- Clean the battery.
- Charge the battery.
- Store the battery in a dry and well-ventilated room at around 20 °C.
- Charge the battery again before installing it.

10.1.4 Removing engine preservation

- Remove the covers from the intake and exhaust gas openings of the engine.
- Remove the anti-corrosion agent from the pulleys.
- Install the fan belt.
- Drain the preservation oil and add engine oil.
- Start up the engine.
- Check the belt tension after the first two operating hours.

10.1.5 Putting the vehicle back into operation

- Remove engine preservation.
- Install the battery.
- Check the air pressure of tires.
- Remove the preservation from the piston rods of the hydraulic cylinders.
- Set the vehicle on its wheels.
- Check the operation of the electrical system.
- Bleed the hydraulic system.
- Check the operation of the steering system and brakes.
- Carry out maintenance work as before initial putting into operation.

10.2 Permanent shutdown

10.2.1 Information on permanently putting the vehicle out of operation

If the vehicle is no longer used according to its designated use, ensure that it is put out of operation and disposed of according to applicable regulations.

Do not allow the oil and oily wastes to get into the ground and stretches of water! Dispose of different materials and consumables separately and in an environmentally friendly manner!

Dispose of batteries in an environmentally friendly manner and in accordance with the applicable regulations.

10.2.2 Prior to disposal

- All applicable safety regulations relating to decommissioning the vehicle must be complied with.
- Ensure that the vehicle cannot be operated from decommissioning until further disposal.
- Ensure that there is no leakage of environmentally hazardous fluids and consumables, and that the vehicle presents no other hazards at its storage place.
- Secure the vehicle against unauthorized use! Close all openings (doors, windows, engine hood) and secure the vehicle.
- Install all protective devices.
- Repair leaks in tanks and hydraulic system.
- Remove the battery.
- Store the vehicle in a place that is protected against unauthorized access.

10.2.3 Disposing of the vehicle

- Further recycling of the vehicle must be carried out in accordance with the state of the art valid at the time of recycling and in compliance with the accident prevention regulations.
- All parts must be disposed of in the correct waste disposal sites for the different materials.
- Separate the material as you recycle parts.
- Ensure environmentally compatible disposal of fluids and auxiliary substances.

11 Accessories

11.1 Attachments

11.1.1 Information on attachments



NOTICE

Damage due to incorrect attachments.

Attachments that are too heavy or large can overload the loader unit and could thus result in damage.

- ► To prevent damage to the vehicle, only use attachments approved by the vehicle manufacturer.
- ► If you have any questions relating to attachments, contact an authorized service center.

Not all attachments are approved for use on public roads. Check into the road approval of the respective attachment before driving the vehicle on public roads.

Attachments that are not approved for use on public roads must be removed and transported to the place of use using a suitable transport vehicle.

The following attachments are described in this operator's manual:

- Standard bucket (lightweight and earth bucket)
- 4-in-1 bucket
- Pallet fork

Descriptions of other attachments can be found in the operator’s manuals of the respective attachments.

The service partner is always available for any questions regarding the power coupler and the associated attachments.

11.2 Other accessories

11.2.1 USB socket



Fig. 259: USB socket

Depending on the vehicle equipment, a permanently installed USB socket is available in the vehicle.

To protect against dust and dirt, always close the socket with the cover cap. Penetrating dirt can impair the function of the socket.

12 Technical Data

12.1 Conversion table

The following conversion tables enable the conversion of the metric values from the instructions, in particular the technical data, into the imperial.

Conversion table	
Volume units	
1 cm³	0.061 in³
1 m³	35.31 ft³
1 ml	0.034 US fl.oz.
1 l	0.26 gal.
1 l/min	0.26 gal./min
Length units	
1 mm	0.039 in
1 m	3.28 ft
Weights	
1 kg	2.2 lbs.
1 g	0.035 oz.
Pressure	
1 bar	14.5 psi
1 kg/cm²	14.22 lbs/in²
Force/output	
1 kN	224.81 lbf
1 kW	1.34 hp
1 PS	0.986 hp
Torque	
1 Nm	0.74 ft.lbs
Speed	
1 km/h	0.62 mph
Acceleration	
1 m/s²	3.28 ft./s²

12.2 Dimensions

12.2.1 Vehicle dimensions

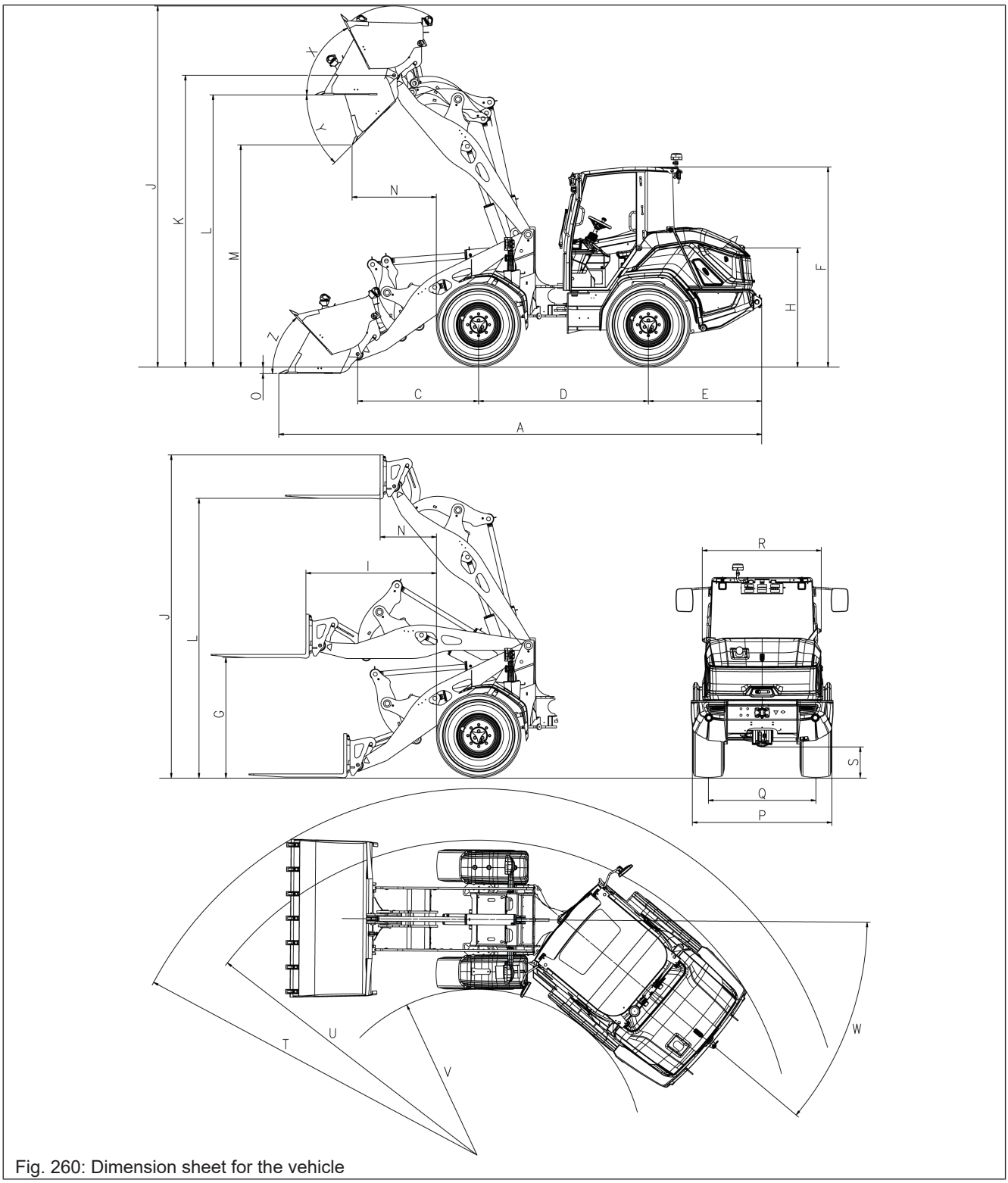

Fig. 260: Dimension sheet for the vehicle

Item	Designation [1)]	mm
A	Overall length with standard bucket	5705
A	Overall length with pallet forks	6085

Item	Designation [1)]	mm
B	Overall length without attachment	4855
C	Center of axle to bucket pin	1120
D	Wheelbase	2150
E	Rear overhang	1435
F	Height above cab	2510
G	Overhead loading height with pallet forks (loader unit horizontal)	1500
H	Seat height	1485
I	Maximum reach at “G” with pallet forks	1350
J	Overall operating height with standard bucket	4305
J	Total work height with pallet forks	3820
K	Maximum height bucket pivot point	3425
L	Load-over height with standard bucket	3175
L	Overhead loading height with pallet forks	3270
M	Maximum tilt-out height with standard bucket	2545
N	Maximum reach at M with standard bucket	880
N	Maximum reach at L with pallet forks	525
O	Scraping depth with standard bucket	105
P	Overall width	1830
Q	Track width	1420
R	Width across cab	1505
S	Ground clearance	365
T	Maximum radius with standard bucket	4450
U	Radius at outer edge	3990
V	Inside radius	2070
W	Articulation angle	40°
X	Rollback angle at maximum lifting height	65°
Y	Maximum tilt-out angle	45°
Z	Roll back angle at ground	45°
	Oscillation angle	10°

1) All dimensions with tires 405/70R18 Alliance 608 ET0

12.3 Engine

12.3.1 Engine data

Kohler/Rehlko KDI 2504 TCR	
Manufacturer	Kohler/Rehlko
Design	In-line engine
Vehicle fluid	Diesel/HVO
Number of cylinders	4
Fuel injection system	Common rail direct injection
Charging	Turbocharger with charge air cooler
Cooling	Water
Exhaust gas aftertreatment system	DOC

Kohler/Rehlko KDI 2504 TCR	
Exhaust-emission level	EPA Tier4 final
Displacement in cm³	2482
Idling speed in rpm	1000
Power at nominal speed in kW	55,4
Power at nominal speed in hp	75
Rated speed at rpm	2300
Maximum torque (Nm @ rpm)	315 @ 1500
Maximum permissible inclination (in all directions)	25°
Specific fuel consumption in g/kWh	207
CO2 values (according to NRTC measuring method) g/kWh	788,4

12.4 Hydraulics

12.4.1 Travel hydraulics data

Data	
Flow rate	128.8 l /min
Operating pressure	500 bar
Travel speed Option 1	0 km/h to 30 km/h

12.4.1.1 Tightening torques for high-pressure valves

Thread	Tightening torque
M8	22 Nm
M10	10 Nm

12.4.2 Data of working hydraulics

Component	Value
Displacement volume	91.1 l /min
Operating pressure	235 bar

12.4.3 Data of steering hydraulics

Description and data of steering system	
Fully hydraulic articulated pendulum steering with double-acting hydraulic cylinder	
Flow rate	91.1 l /min
Operating pressure	190 bar
Steering cylinder	1

12.5 Emissions

12.5.1 Exhaust emissions

For the exhaust emissions, see Engine data on page 230.

12.5.2 Noise values

The actual noise emission may deviate from the specified values under certain operating conditions.

Overview of noise parameters dB(A)	Cab
Average sound power level **LwA**	99,8
Guaranteed sound power level **LwA**	101
Specified sound pressure level **LpA**	71

12.5.3 Vibrations

Hand-arm vibrations

The hand-arm vibrations do not exceed 2.5 m/s².

Whole body vibrations

This vehicle is equipped with a driver's seat that meets the requirements of EN ISO 7096: 2000. When the vehicle is used as intended, the whole body vibrations vary from less than 0.5 m/s² to a short-term maximum value.

It is recommended to use the values given in the table when calculating the vibration values according to ISO/TR 25398: 2006. Actual conditions of use must be taken into account.

Telehandlers, like wheel loaders, are classified according to their operating weight.

Vehicle category	Typical operating condition	Average			Standard deviation(s)		
		1,4*aw,eqx	1,4*aw,eqy	aw,eqz	1,4*sx	1,4*sy	sz
Compact wheel loader operating weight <4,500 kg	Load & carry (loading and transport work)	0.94 m/s²	0.86 m/s²	0.65 m/s²	0.27 m/s²	0.29 m/s²	0.13 m/s²
Wheel loader operating weight >4,500 kg	Load & carry (loading and transport work)	0.84 m/s²	0.81 m/s²	0.52 m/s²	0.23 m/s²	0.20 m/s²	0.14 m/s²
	Use in extraction (rough use conditions)	1.27 m/s²	0.97 m/s²	0.81 m/s²	0.47 m/s²	0.31 m/s²	0.47 m/s²
	Transfer trip	0.76 m/s²	0.91 m/s²	0.49 m/s²	0.33 m/s²	0.35 m/s²	0.17 m/s²
	V operation (loading work)	0.99 m/s²	0.84 m/s²	0.54 m/s²	0.29 m/s²	0.32 m/s²	0.14 m/s²

12.6 Weights

12.6.1 Trailer loads and drawbar loads

Maximum 10% permissible gradient or slope when driving with a trailer.

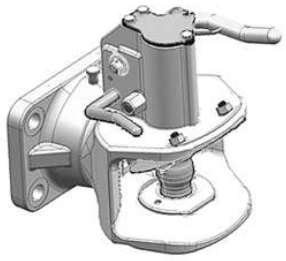

Fig. 261: Trailer coupling automatic

Trailer coupling automatic

Weight	kg
Permissible trailer load with braked trailer	8000
Permissible trailer load with unbraked trailer	750
Permissible drawbar load on trailer coupling	75

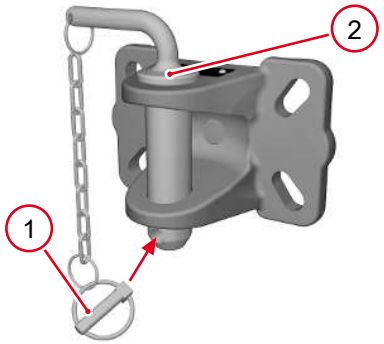

Fig. 262: Maneuvering coupling

Maneuvering coupling

The maneuvering coupling is not approved for towing trailer loads for transportation. Only use the maneuvering coupling for maneuvering work.

Weight	kg
Permissible trailer load with braked trailer	8000
Permissible trailer load with unbraked trailer	750
Permissible drawbar load on trailer coupling	75

12.6.2 Weight of the vehicle

The weight of the vehicle may vary due to different equipment/ballast weights.

Designation [1)]	Values in kg
Operating weight	5900
Permissible total weight	6600
Permissible axle load front	3300
Permissible rear axle load	4800
Tipping load with bucket loader unit horizontal, vehicle straight	3730
Tipping load with bucket loader unit horizontal, vehicle bent	3150
Payload with bucket (S= 2)	1575
Tipping load with pallet fork loader unit horizontal, vehicle straight	3290
Tipping load with pallet fork loader unit horizontal, vehicle bent	2810
Lift capacity with pallet fork (S = 1.25)	2244
Lift capacity with pallet fork (S = 1.67)	1683
Load capacity with heavy single load (S = 1.25)	2153
Load capacity with heavy single load (S = 1.67)	1615
Load capacity with load hook on attachment point 1 (S=2)	1493

Designation [1]	Values in kg
Load capacity with load hook on attachment point 2 (S=2)	1219
Load capacity with load hook on attachment point 3 (S=2)	1030

1) Payload and carrying load according to ISO 14397 – EN474-3

Payload and bearing load

Specified payloads and bearing loads are values for the vehicle with basic equipment. Payloads and bearing loads change due to different vehicle configurations. Values given are for the minimum vehicle performance.

The payloads and bearing loads are determined starting from the "Tipping load with bucket load system horizontal, vehicle bent".

The payload of the vehicle with bucket is determined as follows:

- The vehicle is on uneven and soft ground (conversion factor S = 2).

The payloads of the vehicle with pallet fork are determined using two values:

- The vehicle is on level and stable ground (conversion factor S=1.25).
- The vehicle is on uneven and soft ground (conversion factor S=1.67).

The payload for pallet forks applies with a load center of gravity (LSP) 500 mm from the back of the fork. The further the LSP is from the back of the fork, the lower the load capacity.

The lift capacity for pallet fork heavy single load applies with a load center of gravity (LSP) 600 mm from the back of the fork.

Other influencing factors on the payload and bearing load include, among other things:

- Transport on slopes and inclines
- Tires and air pressure
- Additional ballast weights

13 Annex

13.1 Introduction

Dear customer,

The prescribed regular inspection intervals are listed below. Note that additional maintenance must be performed outside the inspection intervals listed here as specified in the operator’s manual. Please observe the safety instructions in the operator's manual!

We recommend that you carry out all control and maintenance measures prescribed by us regularly and in time. This will ensure the best possible performance, reliability and safety of your machine.

To maintain your warranty claim, all maintenance and repair work during the warranty period should be carried out by a service center.

Only use spare parts, accessories and additional equipment approved by the manufacturer. Components that have not been tested and approved by the manufacturer can considerably impair the functionality of the machine and thus the driving and work safety!

Any liability is excluded for damage resulting from the use of components or accessories that are not from or approved by the manufacturer.

Please make sure that the proper completion of each inspection is confirmed with a stamp and signature from the service center in this booklet. In case of a possible resale of the machine the completely filled out booklet is a quality certificate and a valuable sales aid for you.

13.2 Warranty

We have provided a warranty to the responsible service partner.

Warranty and liability claims for personal injury and damage to property are not valid if they can be attributed to one or more of the following causes:

- Damage caused by improper operation or maintenance of the machine (contrary to the manufacturer's recommendations).
- Damage caused by tampering with the machine or modifications made to it (if not approved in writing by the manufacturer).
- Damage caused by the use of lubricants or spare parts not approved by the manufacturer.
- Damage caused by the use of non-original Wacker Neuson spare parts.
- Damage caused by the use of attachments or accessories that have not been approved by the manufacturer.
- Damage caused by wear and tear.
- Removal of sealings or seals. The manufacturer's liability is governed by the applicable general terms and conditions of sale.

Special conditions for drive batteries / accumulators. The sales partner is not entitled to warranty, especially in case of:

- repeated deep discharge of the battery or continued operation or storage in a deep discharged state.



Information

The warranty guideline in force at the time of conclusion of the contract is decisive!



Information

The warranty regulations only come into force once the completed handover confirmation has been signed by the recipient and then handed over to the service partner for storage in the machine file.

Vehicle handover to the customer must be reported immediately by the service partner to the manufacturer via the dealer access (e.g. extranet / e-commerce).

13.3 Vehicle information

Vehicle information

Vehicle model: _____

Vehicle identification number: _____

Engine type: _____

Engine number: _____

Delivery date _____

Importer

Name: _____

Street: _____

Postcode/city _____

Telephone: _____

Fax: _____

E-mail: _____

Service center (name, address)

Name: _____

Street: _____

Postcode/city _____

Telephone: _____

Fax: _____

E-mail: _____

Customer (name, address)

Name: _____

Street: _____

Postcode/city _____

Telephone: _____

Fax: _____

E-mail: _____

PDI (handover inspection)

PDI performed: ☐

Handover confirmation performed in the E-Partner: ☐

_____

(Stamp, date, signature)

13.4 Inspection certificates

The inspection intervals are subdivided as follows:

A Once after 100 operating hours.

B Every 500 operating hours.

C Every 1500 operating hours or annually.

1. Inspection after 100 operating hours	3. Inspection after 1000 operating hours
WL1150 | A06-01 Machine designation Chassis number Operating hours The inspection and maintenance work listed in the operator's manual has been carried out properly. Stamp and Signature Service partner — Date	WL1150 | A06-01 Machine designation Chassis number Operating hours The inspection and maintenance work listed in the operator's manual has been carried out properly. Stamp and Signature Service partner — Date
2. Inspection after 500 operating hours	**4. Inspection** after 1500 operating hours
WL1150 | A06-01 Machine designation Chassis number Operating hours The inspection and maintenance work listed in the operator's manual has been carried out properly. Stamp and Signature Service partner — Date	WL1150 | A06-01 Machine designation Chassis number Operating hours The inspection and maintenance work listed in the operator's manual has been carried out properly. Stamp and Signature Service partner — Date

5. Inspection

after 2000 operating hours

WL1150 | A06-01
Machine designation

Chassis number

Operating hours

The inspection and maintenance work listed in the operator's manual has been carried out properly.

Stamp and Signature
Service partner

Date

7. Inspection

after 3000 operating hours

WL1150 | A06-01
Machine designation

Chassis number

Operating hours

The inspection and maintenance work listed in the operator's manual has been carried out properly.

Stamp and Signature
Service partner

Date

6. Inspection

after 2500 operating hours

WL1150 | A06-01
Machine designation

Chassis number

Operating hours

The inspection and maintenance work listed in the operator's manual has been carried out properly.

Stamp and Signature
Service partner

Date

8. Inspection

after 3500 operating hours

WL1150 | A06-01
Machine designation

Chassis number

Operating hours

The inspection and maintenance work listed in the operator's manual has been carried out properly.

Stamp and Signature
Service partner

Date

9. Inspection

after 4000 operating hours

WL1150 | A06-01
Machine designation

Chassis number

Operating hours

The inspection and maintenance work listed in the operator's manual has been carried out properly.

Stamp and Signature
Service partner

Date

11. Inspection

after 5000 operating hours

WL1150 | A06-01
Machine designation

Chassis number

Operating hours

The inspection and maintenance work listed in the operator's manual has been carried out properly.

Stamp and Signature
Service partner

Date

10. Inspection

after 4500 operating hours

WL1150 | A06-01
Machine designation

Chassis number

Operating hours

The inspection and maintenance work listed in the operator's manual has been carried out properly.

Stamp and Signature
Service partner

Date

12. Inspection

after 5500 operating hours

WL1150 | A06-01
Machine designation

Chassis number

Operating hours

The inspection and maintenance work listed in the operator's manual has been carried out properly.

Stamp and Signature
Service partner

Date

13. Inspection

after 6000 operating hours

WL1150 | A06-01
Machine designation

Chassis number

Operating hours

The inspection and maintenance work listed in the operator's manual has been carried out properly.

Stamp and Signature
Service partner

Date

15. Inspection

after 7000 operating hours

WL1150 | A06-01
Machine designation

Chassis number

Operating hours

The inspection and maintenance work listed in the operator's manual has been carried out properly.

Stamp and Signature
Service partner

Date

14. Inspection

after 6500 operating hours

WL1150 | A06-01
Machine designation

Chassis number

Operating hours

The inspection and maintenance work listed in the operator's manual has been carried out properly.

Stamp and Signature
Service partner

Date

16. Inspection

after 7500 operating hours

WL1150 | A06-01
Machine designation

Chassis number

Operating hours

The inspection and maintenance work listed in the operator's manual has been carried out properly.

Stamp and Signature
Service partner

Date

17. Inspection

after 8000 operating hours

WL1150 | A06-01
Machine designation

Chassis number

Operating hours

The inspection and maintenance work listed in the operator's manual has been carried out properly.

Stamp and Signature
Service partner

Date

19. Inspection

after 9000 operating hours

WL1150 | A06-01
Machine designation

Chassis number

Operating hours

The inspection and maintenance work listed in the operator's manual has been carried out properly.

Stamp and Signature
Service partner

Date

18. Inspection

after 8500 operating hours

WL1150 | A06-01
Machine designation

Chassis number

Operating hours

The inspection and maintenance work listed in the operator's manual has been carried out properly.

Stamp and Signature
Service partner

Date

20. Inspection

after 9500 operating hours

WL1150 | A06-01
Machine designation

Chassis number

Operating hours

The inspection and maintenance work listed in the operator's manual has been carried out properly.

Stamp and Signature
Service partner

Date

21. Inspection

after 10000 operating hours

WL1150 | A06-01
Machine designation

Chassis number

Operating hours

The inspection and maintenance work listed in the operator's manual has been carried out properly.

Stamp and Signature
Service partner

Date

23. Inspection

after 11000 operating hours

WL1150 | A06-01
Machine designation

Chassis number

Operating hours

The inspection and maintenance work listed in the operator's manual has been carried out properly.

Stamp and Signature
Service partner

Date

22. Inspection

after 10500 operating hours

WL1150 | A06-01
Machine designation

Chassis number

Operating hours

The inspection and maintenance work listed in the operator's manual has been carried out properly.

Stamp and Signature
Service partner

Date

24. Inspection

after 11500 operating hours

WL1150 | A06-01
Machine designation

Chassis number

Operating hours

The inspection and maintenance work listed in the operator's manual has been carried out properly.

Stamp and Signature
Service partner

Date

25. Inspection

after 12000 operating hours

WL1150 | A06-01
Machine designation

Chassis number

Operating hours

The inspection and maintenance work listed in the operator's manual has been carried out properly.

Stamp and Signature
Service partner

Date

27. Inspection

after 13000 operating hours

WL1150 | A06-01
Machine designation

Chassis number

Operating hours

The inspection and maintenance work listed in the operator's manual has been carried out properly.

Stamp and Signature
Service partner

Date

26. Inspection

after 12500 operating hours

WL1150 | A06-01
Machine designation

Chassis number

Operating hours

The inspection and maintenance work listed in the operator's manual has been carried out properly.

Stamp and Signature
Service partner

Date

28. Inspection

after 13500 operating hours

WL1150 | A06-01
Machine designation

Chassis number

Operating hours

The inspection and maintenance work listed in the operator's manual has been carried out properly.

Stamp and Signature
Service partner

Date

29. Inspection

after 14000 operating hours

WL1150 | A06-01

Machine designation

Chassis number

Operating hours

The inspection and maintenance work listed in the operator's manual has been carried out properly.

Stamp and Signature
Service partner

Date

30. Inspection

after 14500 operating hours

WL1150 | A06-01

Machine designation

Chassis number

Operating hours

The inspection and maintenance work listed in the operator's manual has been carried out properly.

Stamp and Signature
Service partner

Date

WHEEL LOADER/TRACTOR

www.aem.org

SAFETY MANUAL

FOR OPERATING AND MAINTENANCE PERSONNEL



Contents

ACKNOWLEDGEMENT 2
FOREWORD 3
SAFETY ALERT SYMBOL 4
SIGNAL WORDS 5
A WORD TO THE USER/OPERATOR 6
FOLLOW A SAFETY PROGRAM 7
PREPARE FOR SAFE OPERATION 11
START SAFELY 16
WORK SAFELY 19
LOAD AND UNLOAD YOUR MACHINE SAFELY 29
PARK SAFELY 30
PERFORM MAINTENANCE SAFELY 32
TEST YOUR KNOWLEDGE 45
A FINAL WORD TO THE USER 46

Acknowledgement

We wish to acknowledge the contributions of all members of the Association of Equipment Manufacturers in the preparation of this Safety Manual.

NOTICE OF COPYRIGHT PROTECTION

AEM Safety Manuals are protected as a copyrighted work with ownership duly registered with the Copyright Office, Washington, D.C. Any reproduction, translation, decompiling or other use of an AEM Safety Manual, or portion thereof, or the creation of derivative works based on an AEM Safety Manual, without the prior written approval of AEM is expressly prohibited. Copyright infringement can result in civil and criminal sanctions, damages and other penalties being imposed.

Copyright ©1991 AEM (formerly Equipment Manufacturers Institute)
(revised 04/02, 04/03 and 04/05)

Foreword



This Safety Manual is intended to point out some of the basic safety situations that may be encountered during the normal operation and maintenance of your machine and to suggest possible ways of dealing with these conditions. This manual is NOT a substitute for the manufacturer's manual(s). Additional precautions may be necessary, or some instructions may not be applicable, depending on the equipment, attachment devices, and conditions at the worksite or in the service area. The manufacturer has no direct control over machine application, operation, inspection, lubrication, or maintenance. Therefore, it is YOUR responsibility to use good safety practices in these areas.

The information provided in this manual supplements the basic information about your machine that is contained in your manufacturer's manual(s). Other information that may affect the safe operation of your machine may be contained in safety signs, or in insurance requirements, employer's safety programs, safety codes, local, state/provincial and federal laws, rules, and regulations. Contact the manufacturer of your equipment to answer any questions about safe operation that remain after studying the manufacturer's manual(s) and this Safety Manual.

IMPORTANT: IF YOU DO NOT HAVE A MANUFACTURER'S MANUAL(S) FOR YOUR PARTICULAR MACHINE, GET A REPLACEMENT MANUAL FROM YOUR EMPLOYER, EQUIPMENT DEALER, OR FROM THE MANUFACTURER OF YOUR MACHINE. KEEP THIS SAFETY MANUAL AND THE MANUFACTURER'S MANUAL(S) WITH THIS MACHINE. READ AND UNDERSTAND THE MANUFACTURER'S MANUAL(S).

Safety alert symbol

This Safety Alert Symbol means ATTENTION! BECOME ALERT! YOUR SAFETY IS INVOLVED!



The Safety Alert Symbol identifies important safety messages on machines, safety signs, in manuals, or elsewhere. When you see this symbol, be alert to the possibility of personal injury or death. Follow the instructions in the safety message.

Why is SAFETY important to You?

3 BIG REASONS:

- **ACCIDENTS DISABLE AND KILL**
- **ACCIDENTS COST**
- **ACCIDENTS CAN BE AVOIDED**

Signal Words

Signal words are distinctive words that will be found on the upper panel of safety signs on this wheel loader/tractor and other equipment on the worksite. These words are intended to alert the viewer to the existence and relative degree of a hazard.



⚠ DANGER This signal word indicates an imminently hazardous situation which, if not avoided, will result in death or serious injury.

⚠ WARNING This signal word indicates a potentially hazardous situation which, if not avoided, could result in death or serious injury.

⚠ CAUTION This signal word indicates a potentially hazardous situation exists which, if not avoided, may result in minor or moderate injury.

A word to the user/operator

It is YOUR responsibility to read and understand the safety manual and the manufacturer's manual(s) before operating this machine. This safety manual takes you step-by-step through your working day.

In reading this manual, you will note that any illustration depicting an unsafe work procedure or situation is labeled both with the words "wrong" and the mark of an "X" on the illustration. Each illustration is also numbered and the same number appears in the text in parenthesis. This number is placed at the end of the written text that refers to the illustration. While some of the illustrations appearing in this manual are in the nature of "cartoons", this approach is intended solely as a means to promote your attention to the text. As noted repeatedly throughout this manual, AEM and its Earthmoving Equipment Council are very serious about risks to human life and health caused by unsafe practices.

Remember that YOU are the key to safety. Good safety practices not only protect you but also protect the people around you. Study this manual and the manufacturer's manual(s) for your specific machine. Make them a working part of your safety program. Keep in mind that this safety manual is written for only this type of machine. Practice all other usual and customary safe working precautions, and above all—

REMEMBER — SAFETY IS UP TO

YOU

YOU CAN PREVENT SERIOUS INJURY OR DEATH

Follow a safety program

Protect Yourself

Wear all the protective clothing and personal safety devices issued to you or called for by job conditions.

You may need:

— A hard hat
— Safety shoes
— Safety glasses, goggles, or face shield
— Heavy gloves
— Hearing protection
— Reflective clothing
— Wet weather gear
— Respirator or filter mask.

Wear whatever is needed, don't take chances. (1)

WARNING: Do NOT wear loose fitting clothing, flopping cuffs, dangling neckties or scarves, or rings and wrist watches that can catch in moving parts.

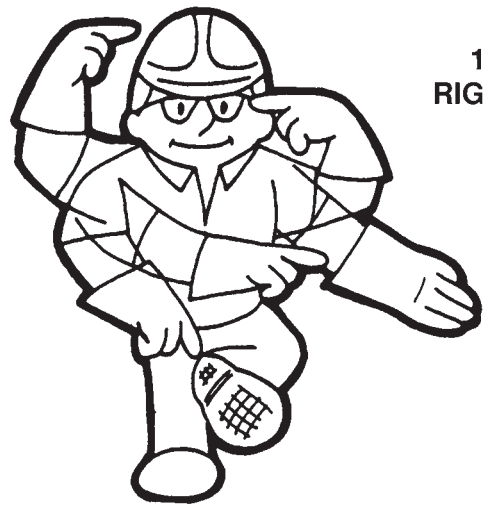

1
RIGHT

Use your head — and your hard hat.

Follow a safety program

Be Alert!

Know where to get assistance. Know how to use a first aid kit and fire extinguisher/fire suppression system.

Be Aware!

Take advantage of training programs offered.

Be Careful!

Human error is caused by many factors: carelessness, fatigue, overload, preoccupation, drugs, and alcohol to name a few. Damage to the machine can be fixed in a short period of time, but injury, or death, has a lasting effect. For your safety and the safety of others, encourage your fellow workers to act safely.

For Safe Operation

For safe operation of this machine, you must be a qualified and authorized operator. To be qualified, you must understand the written instructions supplied by the manufacturer, have training, including actual operation of this machine and know the safety rules and regulations for the jobsite.

On the job, an operator must not use drugs or alcohol which can impair his alertness or coordination. An operator on prescription or over-the-counter drugs needs medical advice regarding whether or not he can safely operate machines.

Know The Rules

Most employers have rules governing operation and maintenance of equipment. Before you start work at a new location, check with your supervisor or the safety coordinator. Ask about rules you may be expected to obey.

Stay alert; Avoid accidents. Don't learn safety the hard way.

Follow a safety program

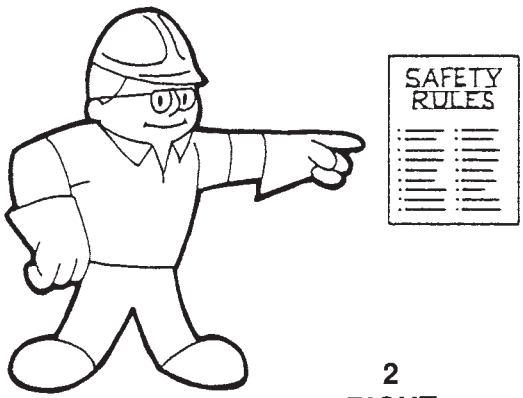

2
RIGHT

Know The Rules (continued)

These are some of the rules you must work by: (2)

— Know the capacity and operating characteristics of this machine.
— Never modify or remove any part of the machine (except for service).
— Fasten your seat belt/restraint (if equipped) before you start.
— Never allow riders on your machine.
— Keep others away from your operation.
— Carry the load low.
— Whenever you leave your machine, always lower the loader bucket, blade or other attachments. Engage the parking brake, stop the engine, cycle the hydraulic controls, and remove the key.
(See page 31, Machine Shutdown.)

Make sure you understand the rules covering traffic at your jobsite. Know what all signs, flags, and markings mean. Understand hand, flag, horn, whistle, siren, and bell signals. Know when to use lights, turn signals, flashers, horns, and beacon.

Know the rules - LIVE by them.

Follow a safety program

Know Your Equipment

Know your machine. Know how to operate all equipment on your machine. Know the purpose of all the controls, gauges, and indicators. Know the rated load capacity, speed range, braking and steering characteristics, turning radius, and operating clearances. Keep in mind that rain, snow, ice, loose gravel, soft ground, etc., change the operating capabilities of your machine. Study the DANGER, WARNING, and CAUTION safety signs on your machine and the information signs too.

STUDY THE MANUFACTURER'S OPERATOR'S MANUAL BEFORE STARTING THE ENGINE. IF THERE IS NO MANUAL WITH THE MACHINE — GET ONE. STUDY IT BEFORE YOU START WORK. (3)

IF THERE IS SOMETHING IN THE MANUAL YOU DON'T UNDERSTAND, ASK YOUR SUPERVISOR TO EXPLAIN IT TO YOU.

IMPORTANT: This manual covers safe practices for Wheel Loader/Tractors. If your machine is equipped with other devices or special accessories, read the manufacturer's operating and safety manuals pertaining to that equipment before using it.



3
RIGHT

Respect your equipment. Make sure you know how it operates.

Check The Safety Equipment

To protect you and others around you, your machine may be equipped with the following safety equipment. See that each item is securely in place and in operating condition.

— Falling Object Protective Structure (FOPS)
— Roll-Over Protective Structure (ROPS)
— Seat Belts/Operator Restraints
— Lights
— Safety Signs
— Horn
— Guards
— Shields
— Back-Up Alarm
— Mirrors
— Fire Extinguisher/Fire Suppression System
— First Aid Kit
— Windshield Washers & Wipers

Use them! Never remove or disconnect any safety device.

WARNING: NEVER REMOVE A FOPS OR ROPS STRUCTURE EXCEPT FOR SERVICE (see page 44 FOPS and ROPS for additional information).

Check The Machine

Before you begin your workday, you should inspect your machine and have all systems in good operational condition. Do not operate the machine until all deficiencies are corrected.

— Check for broken, missing or damaged parts. Make necessary repairs.
— Check the tires for cuts, bulges and correct pressure. Replace badly worn or damaged tires.
— Check service and parking brakes for proper operation.
— Perform all maintenance procedures outlined by the manufacturer of your machine.
— Check the hydraulic system. Repair any leaks.

WARNING: Diesel fuel or hydraulic fluid under pressure can penetrate the skin or eyes and cause serious injury, blindness or death. Fluid leaks under pressure may not be visible. Use a piece of cardboard or wood to find leaks but do not use your bare hand. Wear a face shield or safety goggles for eye protection. If any fluid is injected into the skin, it must be surgically removed within a few hours by a doctor familiar with this type of injury. (See page 39, Be Careful **With Fluids Under Pressure.**)

Prepare for safe operation

Check The Machine (continued)

— Check cooling system.

WARNING: Allow the radiator to cool before checking the level. (See page 39, Be Careful with Hot Cooling Systems.) (4)

— Check that the steering frame lock or link on an articulated machine has been removed and properly stored. (5) (See manufacturers manual for installation and removal procedures.)

WARNING: An articulated machine cannot be steered with a steering frame lock in place.

4
WRONG



5
RIGHT

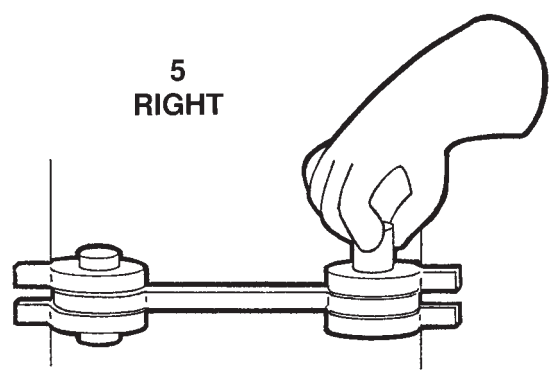

Clean Up

Clean windshields, mirrors and all lights. Make sure the operator's area, steps and hand holds are clean. Oil, grease, snow, ice or mud in these areas can cause you to slip and fall. Clean your boots of excess mud before getting on the machine. (6)

Remove all loose personal items or other objects from the operator's area. Secure these items in the tool box or remove them from the machine.

6
RIGHT

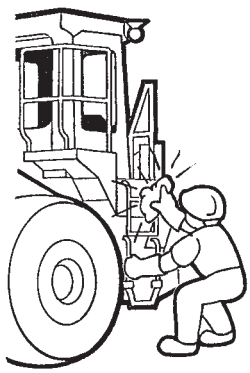

7
RIGHT

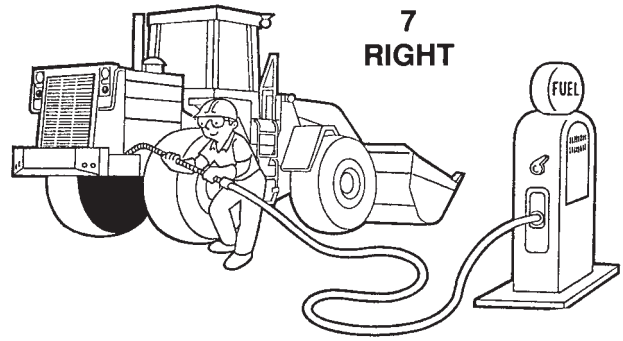

Use Caution When Fueling

WARNING: Never fill the fuel tank with the engine running, while smoking or when near an open flame. (7)

Never overfill the tank or spill fuel. If fuel is spilled, clean it up immediately.

Ground the fuel funnel or nozzle against the filler neck to prevent sparks and be sure to replace the fuel tank cap.

(For additional information on fire hazards, refer to the section on Fire Prevention, page 40.)

Don't fool with fuel.

Know The Working Area

Learn — beforehand — as much about your working area as possible. (8)

— Location of slopes.
— Conditions of haul roads.
— Direction of travel on haul roads.
— Holes, obstructions, mud or ice.
— Heavy traffic.
— Thick dust, smoke, fog.
— Exact location of any buried and/or overhead electrical, gas, telephone, water, sewer, or other utility lines. If necessary, have the utility company mark, shut off, or relocate them before you begin working.



8
RIGHT



9
WRONG

WARNING: Never approach power lines with any part of your machine unless all local, state/provincial and federal (OSHA) required safety precautions have been taken. Use extreme caution.

When operating machine inside a building, know your machine dimensions, know what clearances you will encounter — overhead, doorway, aisles, etc.; also, the weight limitations of floors and ramps. (9) Make sure there is sufficient ventilation for inside operation.

What you don't know CAN hurt you.

Prepare for safe operation

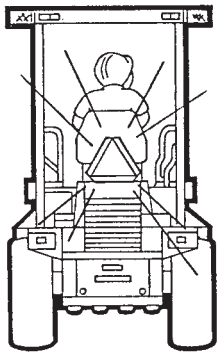

10
RIGHT

Place the bucket or blade in the transport position and secure all accessory equipment. Approach intersections with caution, observe speed and traffic control signs. Don't speed. Know your stopping distance at a given speed. Always regulate your travel speed accordingly. Avoid panic stops and sharp turns. If traffic backs up, pull over and allow other vehicles to pass.

Stop at all railroad crossings and look both ways before proceeding. Never park in traffic areas. If it is necessary to stop at night, pull off the road and set up flares or reflectors. When driving at night, use appropriate lights.

Always use hand signals or turn signals when turning. (11)

Rules Of The Road

If the machine is to be driven over the road, refer to the manufacturer's manual for instructions.

Make sure clearance flags, all lights and warning signs are in place and visible. Make sure the "Slow Moving Vehicle" emblem is visible to any vehicle approaching from the rear. (10)

When traveling on public roads or streets, obey all local traffic regulations appropriate to your machine use and local classification. Always use hazard warning lights. Find out if you must use an escort vehicle or road permit.

11
RIGHT

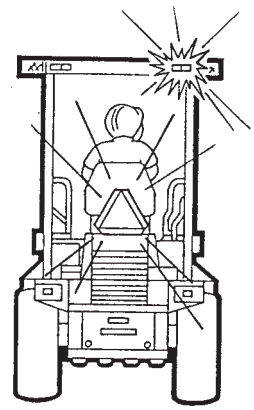

Know the rules or pay the price.

Start Safely

Mount Safely

When you get on or leave the machine, always:

— Maintain a three point contact with the steps and hand holds. (12)
— Face the machine when either mounting or dismounting.
— Never jump on or off the machine. Never attempt to mount or dismount a moving machine.

Do not use the steering wheel or any control lever as a hand hold when you enter or leave the machine.

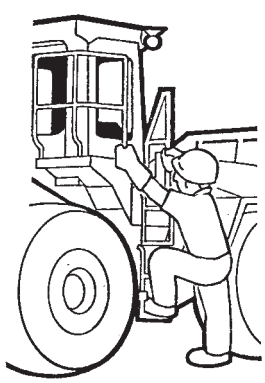

12
RIGHT

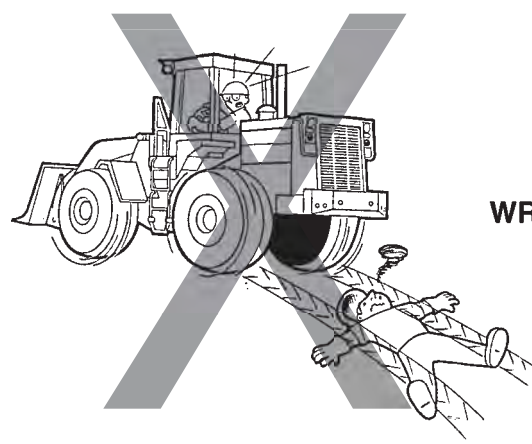

13
WRONG

Warn Personnel Before Starting

Before starting, walk completely around the equipment. Make sure no one is under the machine, on it, or close to it. (13) Sound the horn and let other workers and bystanders know you are starting up. Don't start until everyone is clear of the machine.

Look out for others.

Start Safely

Starting The Engine

WARNING: START THE ENGINE FROM THE OPERATOR'S SEAT ONLY. NEVER ATTEMPT TO START THE ENGINE BY SHORTING ACROSS STARTER TERMINALS OR REACHING THE KEY FROM THE GROUND. The machine may start in gear if neutral-start circuitry is bypassed. This could cause machine to move suddenly and cause serious injury or death to anyone in its path. (14)

Know the exact starting procedure for your machine. See the manufacturer's manual(s) for starting.

1. Sit in the operator's seat and adjust the seat so you can operate all the controls properly.
2. Fasten the seat belt/operator restraint (if equipped).
3. Familiarize yourself with warning devices, gauges and operating controls.
4. Engage the parking brake (if so equipped) and put all controls in the neutral/park position.
5. Clear the area of all persons.
6. Start the engine following the instructions in the manufacturer's manual(s).

If necessary to run the engine or operate the machine within an enclosed area, be **positive** there is adequate ventilation.

WARNING: Exhaust fumes can kill.

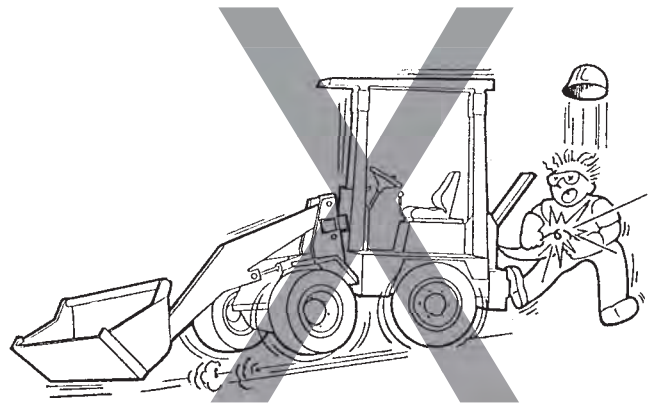

14
WRONG

Start Safely

Starting Aids

If jumper cables are used, follow the instructions in manufacturer's manual(s). The operator must be in the operator's seat when jump starting engine so that the machine will be under control when engine starts. Jump starting is a two person operation. A battery explosion or a run-away machine could result from improper jump starting procedures. Never jump-start a frozen battery.
(See page 41)

Ether Cold-Start Fluid is highly flammable and explosive. Before using it, always read the instructions on the ether container and the instructions in the manufacturer's manual(s).

Do not use ether if the engine is equipped with a glow plug type preheater or other intake manifold type preheater.

After Starting Engine

Observe gauges, instruments, and warning lights to assure that they are functioning and their readings are within the operating range.

Run An Operating Check

Do not use a machine that is not in proper operating condition. It is the OPERATOR'S RESPONSIBILITY to check the condition of all systems, and to run the check in a safe area.

Test Controls

Make sure the engine is operating correctly. With the transmission in neutral, test engine speed control. Operate each equipment control lever to make sure all functions are correct.

Operate the shift control(s) to insure correct operation in forward, neutral, and reverse. (15)

Check the parking brake and service brakes according to the manufacturer's manual(s). Test steering — right and left — while moving slowly.

15
RIGHT

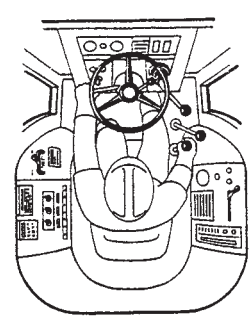

WARNING: BE CERTAIN YOU CAN CONTROL SPEED, DIRECTION AND BRAKING BEFORE OPERATING THE MACHINE.

Work Safely

Remember These Rules

If equipped with ROPS, stay in the operator's seat at all times when operating and keep your seat belt/operator restraint fastened and comfortably snug. Be in control of your machine at all times. (16) In the event of a rollover, stay in the seat with seat belt fastened.

Assure yourself that the work area is clear of all persons.

16
RIGHT



17
RIGHT

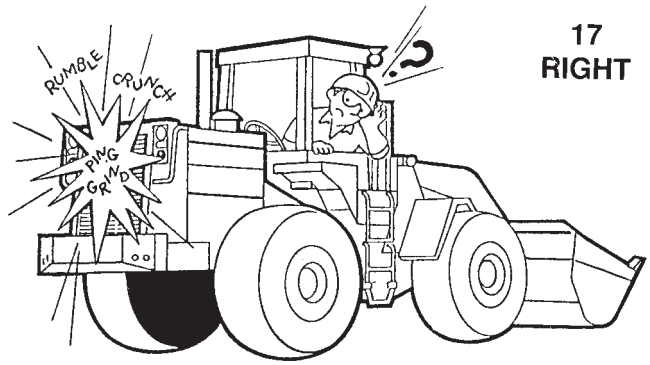

Look and listen for malfunctions. Stop if a malfunction or erratic operation is detected. Correct or report trouble immediately. (17)

If you don't think you can stop —don't start.

Work Safely

Remember The Other Person

Never allow an untrained or unqualified person to operate your machine. Handled improperly, this machine could cause severe injury or death.

WARNING: YOUR WHEEL LOADER/TRACTOR IS A ONE-PERSON MACHINE. NEVER PERMIT RIDERS. (18)

18
WRONG

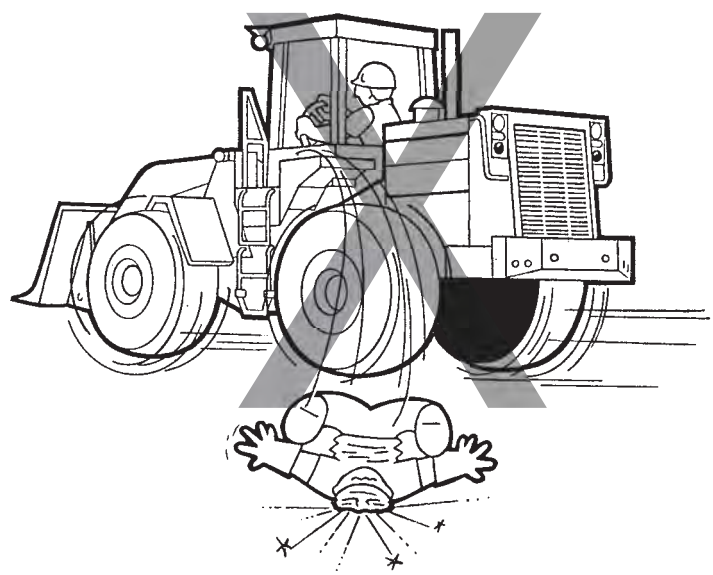

No riders allowed.

Remember The Other Person (continued)

Never use a bucket for a work platform or personnel carrier.

Always look around before you back up, hook up, or swing an attachment. Be sure that everyone is in the clear.

Know the pinch points and rotating parts on the machine. Awareness on your part can prevent accidents.

WARNING: Never let anyone in or near the pivot area of articulated machines. (19)



19
WRONG



20
WRONG

WARNING: NEVER LIFT, MOVE OR SWING A LOAD OVER ANYONE. (20)

Traveling On The Jobsite

Take it slow and easy when traveling through congested areas. Traffic courtesy pays off.

Give the right of way to loaded machines. Maintain a safe distance from other machines. Pass cautiously.

Stay away from pinch and wrap points.

Traveling On The Jobsite (continued)

Don't obstruct your vision when traveling or working. Carry the bucket or blade LOW for maximum stability and visibility. (21) Carry attachments in transport position. Operate at speeds slow enough so you have complete control at all times. Travel slowly over rough or slippery ground and on hillsides.

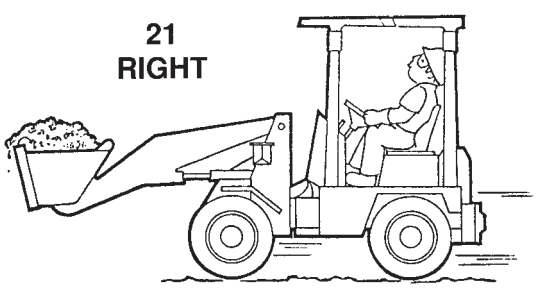

21
RIGHT

Stay in gear when traveling downhill. Do not shift into neutral. Maintain engine RPM to provide steering and braking functions. Use the same gear for traveling down a grade as you would for traveling up the grade.

Safety Precautions

When working in hazardous areas, be extremely alert.

Extreme caution is required when backfilling as the weight of the fill material plus the weight of the machine could cause new construction to collapse. (22)
Do not use your machine as a ram.



22
WRONG

Carry the load low.

Safety Precautions (continued)

WARNING: Never undercut a high bank. (23)

When working at the base of a bank, overhang, or stockpile, avoid dangers such as rock or earth slides, overhanging trees or a cave-in, by proper job operation.

23
WRONG



Extreme caution should be used when working along the top of banks or slopes. Keep away from the edge.

24
WRONG



WARNING: Never operate the machine close to the edge of an overhang or stockpile. The edges could collapse or a slide could occur causing severe injury or death. (24)

Don't bank on a bank.

Safety Precautions (continued)

Before entering underpasses, tunnels, or bunkers, check for hazards or obstructions. (25) Also check clearance height.

25
RIGHT

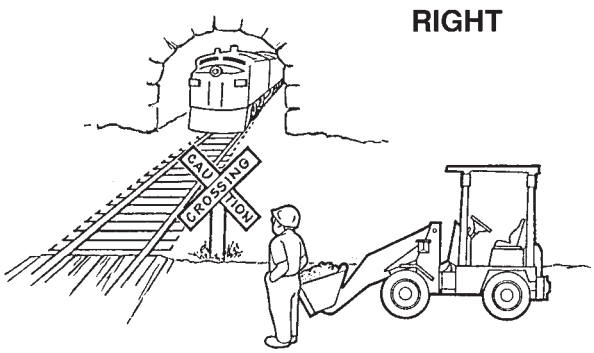

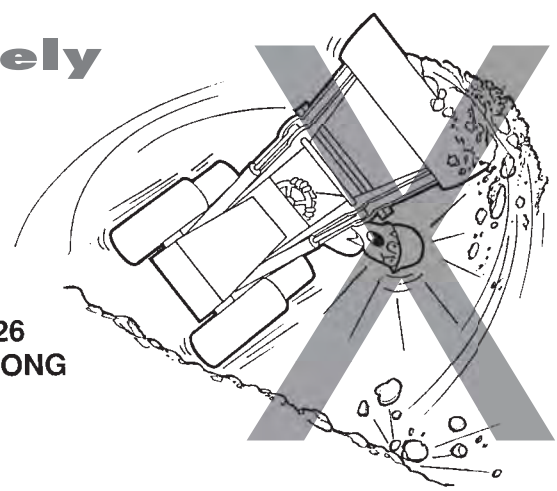

26
WRONG

Avoid steep slopes or unstable surfaces. When operating on a slope, keep the load low and proceed with extreme caution. Do not drive ACROSS a steep slope under any circumstances. (26) Drive straight up and down a steep slope.

Avoid turning on an incline. If it is necessary, use extreme caution and make the turn wide and SLOW with the bucket carried low.

If you can't see where you are going — stop!

Safety Precautions (continued)

WARNING: Travel up and down on inclines, slopes, and ramps only as follows:

LOADED.....Face the bucket (and load) uphill. (27)
EMPTY.....Face the bucket downhill. (27)

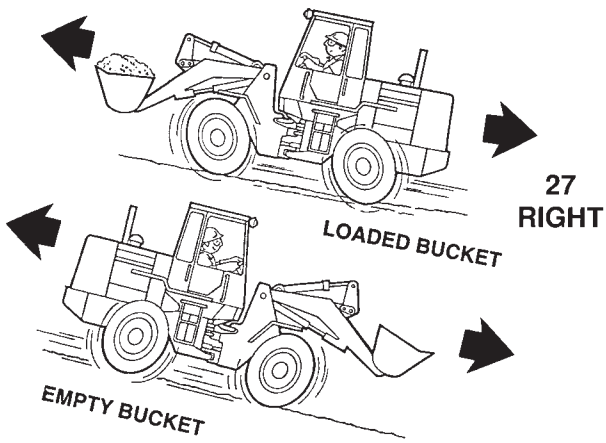

27
RIGHT

When operating the machine in dust, smoke, or fog, use extreme caution. Keep speed to a minimum when visibility is poor.

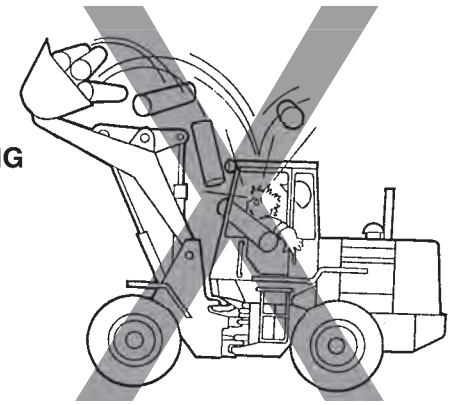

28
WRONG

Be careful when handling objects such as round bales, gas cylinders, sheets of plywood, etc. Lifting too high or rolling bucket too far back could result in these objects sliding rearward down the loader arms onto the operator compartment. (28)

Keep the work area as flat and level as possible. Use bucket or blade to backdrag occasionally to maintain a smooth working surface.

LOADED: bucket uphill -- UNLOADED: bucket downhill.

Safety Precautions (continued)

WARNING: When working on storage piles, stay away from areas where conveyors are discharging and those areas where below grade hoppers or feeders are drawing down materials. Materials may be "bridging" and could suddenly collapse.

When working on a slope, push or drift material downhill, if possible. When pushing material over a cliff or steep embankment, leave a small windrow at the edge. This will allow you to maintain a safe distance from the edge. (29)

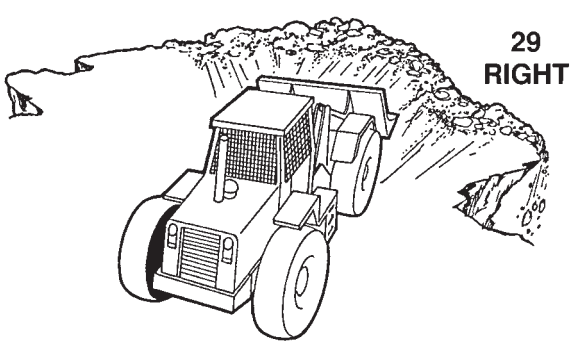

29
RIGHT

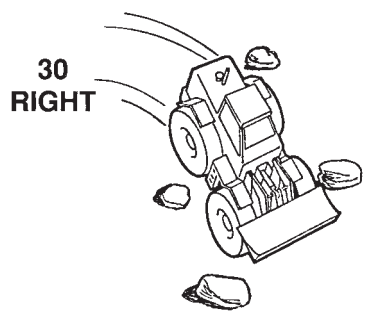

30
RIGHT

Watch Out For Obstacles

Adjust your speed to conditions.

Watch for obstacles. Go around rocks and stumps. Avoid crossing ditches, curbs or exposed railroad tracks. (30) If obstacles are unavoidable; reduce speed, raise bucket, blade or attachment a short distance if needed for clearance, and cross at an angle.

Check for hidden or buried obstacles that could cause a collision. At railroad crossings, stop at approach, remove ear protectors, if any, and look and listen for trains before crossing the tracks.

Watch out for "bridging" on storage piles.

Safety Precautions (continued)

WARNING: If you intend to perform any forestry operations, on-site clearing or demolition with your machine, it must be equipped with a special operator's cage or cab specifically designed for this type of work.

WARNING: Snags (dead standing trees) and **hangers** (cut trees prevented from falling by leaning against other trees) are extreme hazards and must be brought down immediately in a safe manner (check with your supervisor for instructions). (31)(32)

31
RIGHT



WARNING: If you use your bucket or blade to topple trees, back away immediately when the tree starts to fall. Never allow your tractor to ride up onto the root ball.

32
RIGHT



Utilities

Electrocution can result from approaching or contacting energized power lines, apparatus or machines. Machines working near energized sources must be considered energized.

DANGER: Never approach or contact power lines or apparatus with any part of your machine unless all local, state/provincial and federal (OSHA) required safety precautions have been taken. Death or serious injury will result from contact with or inadequate clearance to energized power lines or apparatus.

Check overhead clearances: know your margin of safety. If possible, have power to the lines disconnected. If not possible, request a signal person for guidance. (33)

DANGER: Keep Away! Death or serious injury will result from touching or being near a machine that is in contact with or near an electrical source.

33
WRONG

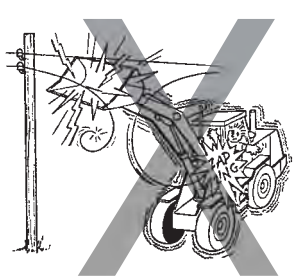

Make sure you know the location of gas lines and water pipes or cables before excavating. (34)

A cut fiber optic cable can cause severe eye injury if you look into the damaged end of the cable.

34
RIGHT

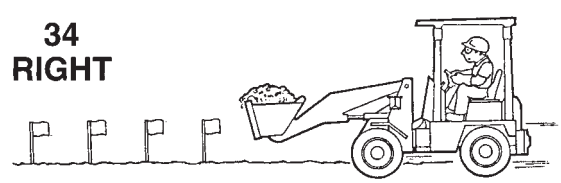

Towing

Towing over-the-road is not recommended. If your machine must be towed on the jobsite, use a rigid tow bar (not a chain or cable). The operator must be in the operator's seat, with safety belt fastened, to maintain control of the machine. (35) See the manufacturer's manual for towing instructions.

35
RIGHT

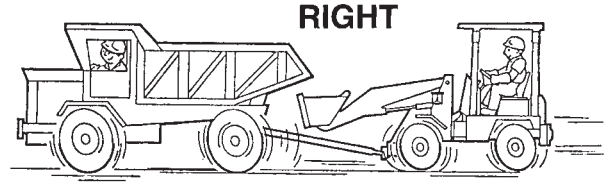

Load and unload your machine safely

Loading And Unloading

If machine is equipped with a ROPS, always wear your seat belt/operator restraint when loading or unloading your machine. (36)

All machines are not loaded the same way, and the procedures recommended by the manufacturer should always be followed.

36
RIGHT

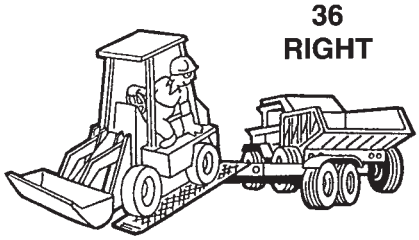

Several precautions are applicable to all machines:

— Know the correct loading and unloading procedures for your machine.

37
RIGHT

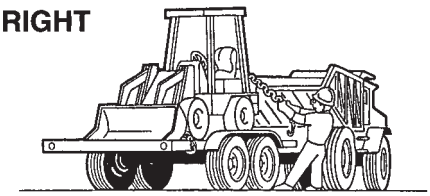

— Load and unload on a level surface.
— Block transport vehicle so it cannot move.
— Use ramps of adequate size and strength; low angle, and proper height.
— Keep trailer bed and ramps clear of mud, oil, ice, snow and all materials which can become slippery.
— On articulated machines, attach the steering frame lock after loading: remove it before unloading.
— Chain and block machine securely for transport. (37)
— Keep everyone clear of the area.
— Secure attachments in transport mode. Lower loader bucket or blade.
— Cover or remove SMV sign before transporting.
— If the ROPS is removed for shipping, reinstall it before the machine is unloaded.

Know the combined overall height and width of the transporter and machine combined to avoid overhead and narrow obstructions.

Check your overall transport height.

Park safely

Select A Site

Select level ground, whenever possible. If you must park on a slope or incline, position the machine at right angles to the slope, engage the parking brake, lower the bucket or blade to the ground and block the wheels. (38) If your machine is equipped with other tools either ground them or place them in a secure position, as specified by the manufacturer's manual(s).

38
RIGHT

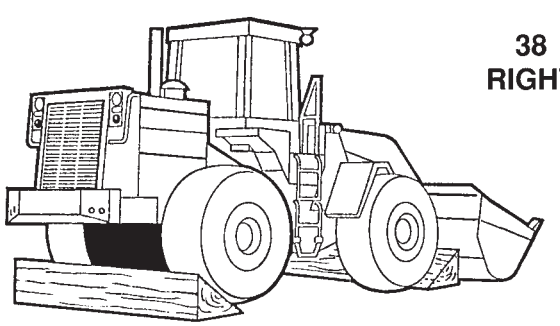

39
WRONG



Haul roads are not suitable for parking. If you must park on one — or if your machine is disabled on one — mark the machine with flags in daytime and flares or flashing lights at night, according to local regulations. (39)

Never leave a machine unattended with the engine running.

Park safely

Machine Shutdown

Refer to your manufacturer's manual(s) for detailed shutdown procedures. In general, the procedure should include the following:

— Stop machine -- using service brake.
— If machine has attachments, lower them to the ground or place in a secure position.
— Shift controls to neutral/park and lock (if so equipped).
— Engage parking brake.
— Idle engine for cool-down period to help prevent trash fires.
— Stop engine.
— Cycle all hydraulic controls to relieve system pressures.
— Remove key. (40)
— Shut off master electric switch (if so equipped).

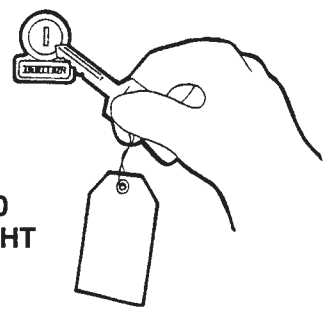

40
RIGHT

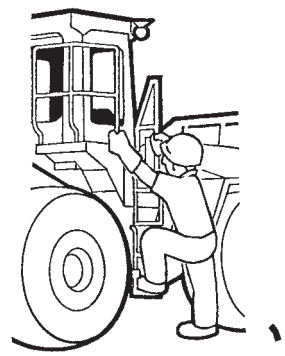

41
RIGHT

— When you leave the machine, always maintain a three point contact with the steps and hand holds and face the machine. Never jump off machine. (41)
— Be careful of slippery conditions on platform, steps, ladders and hand holds when leaving machine.
— Block wheels if on a slope or incline.

Don't give anyone the key to an accident.

Perform maintenance safely

General Procedures

Do not perform any work on a machine unless you are authorized — and qualified — to do so.

If you have been authorized to do maintenance, READ THE MANUFACTURER'S SERVICE AND OPERATOR'S MANUALS. Study the instructions; check the lubrication charts; examine all the instruction messages on the machine. Maintenance can be dangerous unless performed properly. Be sure you have the necessary skill, information, correct tools and equipment to do the job correctly.

Use parts, lubricants and service techniques recommended by the manufacturer.

Attach a **DO NOT OPERATE** tag or similar warning tag to the starter switch or steering wheel before performing maintenance on the machine. (42)

If the engine should not be started, remove the key.

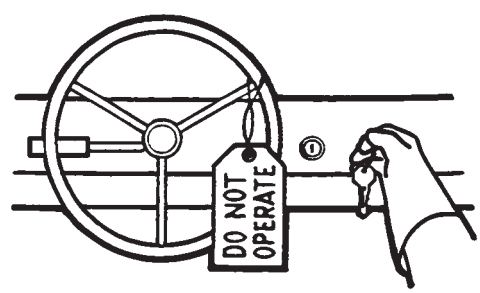

42
RIGHT

If you don't know what you're doing — don't do it.

Perform maintenance safely

Prepare The Work Area

Choose a clean, level work area. Make sure you have sufficient room. Check clearances. Make certain there is adequate light and ventilation.

Clean the walking and working surfaces. Remove oil, grease, and water to eliminate slippery areas. (43) Put sand or other absorbent material on slippery areas.



43
RIGHT



44
RIGHT

Prepare Yourself

Wear all the protective clothing the job requires. (44)

Wear a rubber apron and rubber gloves when working with corrosive materials. Wear gloves and safety shoes when handling wooden blocks, wire rope or sharp-edged metal.

Wear safety shoes -- sandals are for the beach.

Perform maintenance safely

Prepare Yourself (continued)

Safety glasses, goggles or a face shield are always needed for eye protection from electric arcs from shorts, fluids under pressure, while grinding, servicing batteries, and from flying debris or loose material when engine is running or tools are used. (45)

Wear a face-shield when you disassemble spring loaded components or work with battery acid. Wear a helmet or goggles with special lenses when you weld or cut with a torch.

Do not sand, grind, flame-cut, braze or weld without a NIOSH/MSHA approved respirator or appropriate ventilation. If welding is required on this machine, refer to the manufacturer's manuals or consult your equipment dealer for proper procedures.



45
RIGHT



46
WRONG

WARNING: Keep clear of all rotating components. Wrapping or entanglement may result in serious injury or death. (46)

KEEP HANDS — AND CLOTHING — AWAY FROM ALL MOVING PARTS. Don't tempt fate with dangling ties, loose sleeves, rings or long hair.

Wear eye protection.

Perform maintenance safely

Prepare Yourself (continued)

Keep pockets free of all objects which could fall out — and into machinery.

Handle tools and heavy parts CAREFULLY — with regard for yourself and other persons. LOWER ITEMS — DON'T DROP THEM.

Use proper lifting techniques when handling heavy objects Lift with your legs not your back. (47)



47
RIGHT

Prepare The Machine

WARNING: START THE ENGINE FROM THE OPERATOR'S SEAT ONLY. NEVER ATTEMPT TO START THE ENGINE BY SHORTING ACROSS STARTER TERMINALS OR REACHING THE KEY FROM THE GROUND. The machine may start in gear if neutral-start circuitry is bypassed. This could cause machine to move suddenly and cause serious injury or death to anyone in its path.

Move the machine onto a level surface. Stop engine, release all hydraulic pressure. (See MACHINE SHUTDOWN, page 31.) Attach cylinder rod support struts or block all hydraulically operated attachments if they must be in a raised position. (48) Place controls in Neutral and block the wheels.

DANGER: Never work on machinery with the engine running unless so instructed for specific service by the manufacturer's operator's or service manuals.



48
RIGHT

Perform maintenance safely

Prepare The Machine (continued)

WARNING: Never operate any type of engine without proper ventilation - EXHAUST FUMES CAN KILL. (49)

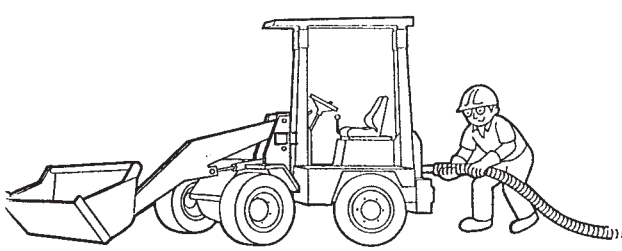

49
RIGHT

If it is necessary to run an engine in an enclosed area, remove the exhaust fumes from the area with an exhaust pipe extension. If you do not have an exhaust pipe extension, make sure you open the doors and get outside air into the area. Unless the steering function is required, you must install the steering frame lock before performing any maintenance.

If adjustments must be made with the engine running, always work as a 2-person team with one person sitting in the operator's seat while the other works on the machine. (50)

Remove only guards or covers that provide access. Wipe away excess grease and oil.

Never leave guards off or access doors open when unattended. Keep bystanders away if access doors are open.

Make certain all guards, screens or panels, and safety signs are reinstalled on the machine as recommended by the manufacturer.

50
RIGHT



When servicing the air conditioning, refer to the freon container for proper use. Contact with the freon stream can cause severe frost burns.

Perform maintenance safely

Use Jacks And Hoists Carefully

If you must work beneath raised equipment, always use wood (NOT CONCRETE) blocks, jack-stands or other rigid and stable supports. (51) When using jacks and hoists always be sure they are adequately supported.

WARNING: Never use concrete blocks for supports. They can collapse under even light loads.

Make sure the hoists or jacks you use are in good repair. Never use jacks with cracked, bent or twisted parts. Never use frayed, twisted or pinched cables. Never use bent or distorted hooks.

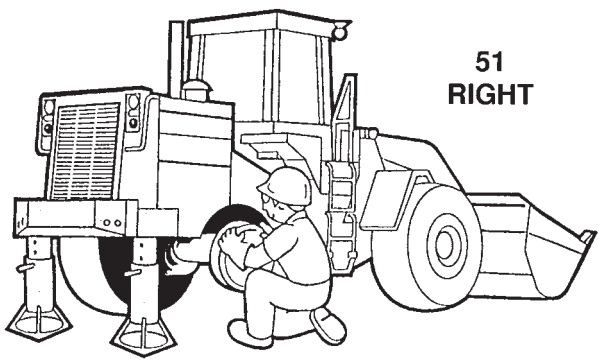

51
RIGHT

Never trust a jack by itself.

52
RIGHT



Avoid Electrical System Hazards

Disconnect the battery before working on the electrical system. Remove the ground cable first. When reconnecting the battery, reconnect the ground cable last.

Never work on the electrical system unless you are thoroughly familiar with system details and the special handling required. (52)

Brake Safety Tips

Always follow manufacturer's manual(s) when adjusting brakes. Improperly adjusted brakes could cause an accident. Block wheels before purging air from the brake system. Air trapped in brake lines can cause erratic performance or loss of brakes. Use only brake fluid recommended by manufacturer.

Perform maintenance safely

Avoid Asbestos Hazards

Some machines (especially older ones) may have components with asbestos contents, primarily in brakes, clutches, and gasket materials. These precautions pertain to machines containing asbestos materials.

CAUTION: Avoid exposure to asbestos dust.

Extreme caution must be used to avoid breathing dust that may be generated when handling components containing asbestos fibers. If this dust is inhaled, it can be hazardous to your health. Components that may contain asbestos fibers are brake pads, brake band and lining assemblies, clutch plates and some gaskets. The asbestos used in new components is usually bound in a resin or sealed in some way. Normal handling is usually not hazardous AS LONG AS AIRBORNE DUST WHICH CONTAINS ASBESTOS IS NOT GENERATED.

If dust which may contain asbestos is present, there are several common sense guidelines that should be followed.

1. Never use compressed air for cleaning (such as blowing out brakes prior to repair).
2. Avoid brushing or grinding of asbestos containing materials.
3. For clean up, use wet methods or a vacuum equipped with a High Efficiency Particulate Air (HEPA) filter.
4. Use exhaust ventilation on permanent machining installation.
5. Wear an approved respirator if there is no other way to control the dust.
6. Comply with applicable rules and regulations for the work place (for example in the U.S.A., OSHA requirements as set forth in 29 CFR 1926.58).
7. Follow environmental rules and regulations for disposal of asbestos.
8. Avoid areas where asbestos particles may be in the air.
9. Shower after any contact.
10. Store food, drink and personal belongings away from the work area.
11. Never eat, drink or smoke where asbestos is in the area.

NOTE: Newer machines have parts with non-asbestos or bonded asbestos which does not give off fibers and poses no danger to health or the environment.

Don't mess with asbestos.

Perform maintenance safely

Be Careful With Fluids Under Pressure

The hydraulic system may be under pressure whenever the engine is running and may hold pressure even after shutdown.

Install cylinder rod support struts or block the cylinders and equipment securely before working on the hydraulic system.

Cycle all hydraulic steering and other controls after shutdown. When venting or filling the hydraulic system, loosen the filler cap slowly and remove it gradually. If the system is equipped with an accumulator, see the manufacturer's service manual for discharge and recharge instructions.

Do not permit an open flame around the hydraulic system.

Clean up spilled fluid immediately.

WARNING: Diesel fuel or hydraulic fluid under pressure can penetrate the skin or eyes and cause serious injury, blindness or death. Fluid leaks under pressure may not be visible. Use a piece of cardboard or wood to find leaks but do not use your bare hand. Wear a face shield or safety goggles for eye protection. If any fluid is injected into the skin, it must be surgically removed within a few hours by a doctor familiar with this type of injury. (53)

53
RIGHT

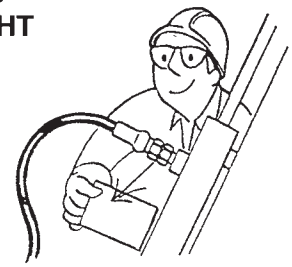

Be Careful With Hot Cooling Systems

WARNING: Liquid cooling systems build up pressure as the engine gets hot. Before removing the radiator cap, stop the engine and let the system cool. Remove the radiator cap only after the coolant is cold.

For cooling systems with an overflow tank, the coolant can usually be checked at the tank without removal of the radiator cap. See manufacturer's instructions.

Pressurized fluid can cause injuries.

Perform maintenance safely

Avoid Fire And Explosion Hazards

Stop the engine and shut off electrical equipment while filling the fuel tank. Use extra caution when fueling a hot engine. Always ground the fuel nozzle against the filler neck to avoid sparks.

WARNING: NEVER SMOKE WHILE HANDLING FUEL OR WORKING ON THE FUEL SYSTEM. THE FUMES IN AN EMPTY FUEL CONTAINER ARE EXPLOSIVE. NEVER CUT OR WELD ON FUEL LINES, TANKS OR CONTAINERS.

Handle all solvents and dry chemicals according to procedures identified on manufacturers' containers. Work in a well-ventilated area. Make sure you know where fire extinguishers are kept and how to use them.

Remove all trash or debris from the machine. Make sure that oily rags or other flammable material are removed from the machine.

Check for fuel, oil or hydraulic fluid leaks. Repair the leaks and clean the machine before you operate.

Ether is flammable. Do not smoke when using ether. Always follow the instructions on the ether can and in the manufacturer's manual(s) for your machine. Do not use ether if the engine is equipped with a glow plug or other type of preheater.

Always use a nonflammable solvent when you clean parts. Do not use gasoline, diesel fuel or other flammable fluids. (54)

Store all flammable fluids and materials away from your work area in suitable containers as per local regulations.

Check readiness of fire extinguishers, fire suppression systems and fire detectors (if so equipped).

54
WRONG



Fuel and flame are a dangerous combination.

Avoid Battery Hazards

WARNING: Lead-acid batteries contain sulfuric acid which will damage eyes or skin on contact. Always wear a face shield to avoid acid in eyes. If acid contacts eyes, flush immediately with clean water and get medical attention. Wear rubber gloves and protective clothing to keep acid off skin. If acid contacts skin, wash off immediately with clean water, then seek medical attention.

WARNING: Lead-acid batteries produce flammable and explosive gases. Keep arcs, sparks, flames and lighted tobacco away. (55)



55
WRONG



56
RIGHT

Use a flashlight to check battery electrolyte level. Always check with engine stopped. (56)

Do not charge a battery or jump-start the engine if the battery is frozen. Warm to 60°F (15°C) or the battery may explode.

Use care when servicing batteries.

Perform maintenance safely

Tire Maintenance

WARNING: Explosive separation of a tire and/or rim parts can cause serious injury or death. Always follow the manufacturer's recommendations or see your tire supplier. (57)

Special tools and procedures are required to change off-highway tires. To do it safely, it must be done correctly. Follow the step by step instructions given in a tire repair manual. Changing tires is a job better done by your tire service company.

Always maintain the correct tire pressure. Do not inflate the tires above the recommended pressure. Be sure to replace tire ballast if machine is so equipped. See manufacturer's specifications for ballast requirements.



57
WRONG

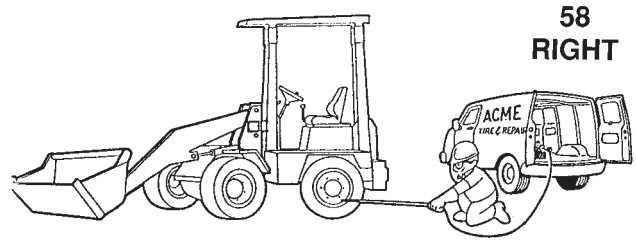

58
RIGHT

Inspect tires and wheels daily. Do not operate with low pressure, cuts, bubbles, damaged rims or missing lug bolts or nuts.

Never cut or weld on the rim or rim parts. This could cause explosive decompression.

Keep wheel lug nuts tightened to manufacturer's recommendations.

A rise in tire pressure is normal during operation. It should NOT be reduced. High speeds during transport may produce excessive tire pressures due to heat. REDUCE YOUR SPEED or stop and let tires cool.

When adjusting tire pressure, do so from a distance. Use a long hose with self-attaching chuck. Always stand behind tread when adjusting tire pressure. (58)

You're riding on them — you keep them safe.

Perform maintenance safely

Tire Maintenance (continued)

Do not inflate tires with flammable gases or from a systems utilizing an alcohol injector.

If the tires are filled with nitrogen DO NOT add air. Fill only with dry nitrogen, using proper inflating equipment.

Tire Repair

Tires are to be repaired only by an authorized person using the proper procedures and safety equipment.

WARNING: Always use a safety cage or cable restraints when reinflating a repaired tire. (59)

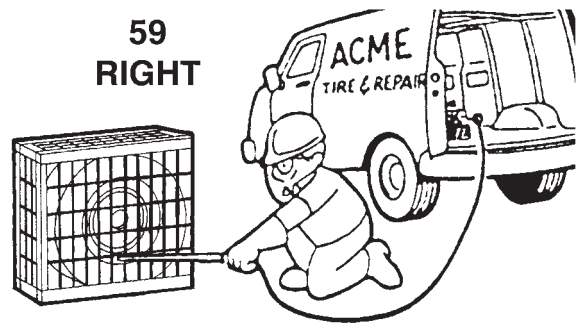

Overinflation is dangerous.

Perform maintenance safely

Air Reservoir Tank

Drain tanks (if so equipped) daily. In cold weather, it is especially important that air tank(s) be thoroughly drained at least once per shift. Be sure drain is closed before starting engine.

Complete Service And Repairs Before Machine Is Operated

Tighten all bolts, fittings, and connections to torques specified by the manufacturer.

Install all guards, covers, and shields after servicing. Replace or repair any damaged ones. Refill and recharge pressure systems only with manufacturer approved or recommended fluids.

Start the engine and check for leaks. (See hydraulic fluid warning, pages 11 and 39). Operate all controls to make sure machine is functioning properly. Road test machine if necessary. After testing, shut down, check the work you performed (any missing cotter pins, washers, locknuts, etc.?). Recheck all fluid levels before releasing machine for operation.

Inspect all parts during repair and replace if cracked or damaged. Excessively worn or damaged parts can fail and cause injury or death. Replace any damaged or illegible decals.

Roll-Over Protective Structure (ROPS) Safety Precautions

If the ROPS is removed, reinstall correctly before the machine is started or moved in any way.

Do not modify the ROPS in any manner. Unauthorized modifications — such as welding, drilling, cutting or adding attachments — could weaken the structure, reduce your protection and also nullify the ROPS certification. Replace the ROPS if it is damaged in any manner such as rollover or collision. Do not attempt to repair the ROPS. See the manufacturer's manual(s) for complete instructions and inspection requirements. If necessary, install a new ROPS, FOPS and seat belt before operating a machine that has rolled over.

Never operate without a ROPS and FOPS.

Test your knowledge

Now that you have read this safety manual, do you understand. . .

— Your safety program?
— Your machine manufacturer's manual(s)?
— Proper clothing and personal safety equipment?
— Your machine's controls, warning signs, devices, and safety equipment?
— How to properly inspect, mount, and start your machine?
— How to check your machine for proper operation?
— Your work area and any special hazards that may exist?
— Proper operating procedures?
— Operating safety precautions?
— Proper loading and unloading procedures for transporting?
— Under what conditions you should not operate your machine?
— Proper parking, shutdown, and dismounting procedures?
— Proper maintenance procedures?



You MUST know these for your safety.

A final word to the user

You have just finished reading the AEM Wheel Loader/Tractor Safety Manual. It is impossible for this manual to cover every hazardous situation you may encounter. But, your knowledge of these safety precautions and your adherence to the basic rules of safety will help build good judgment in all situations. Our objective is to help you develop good safety habits and make you a better wheel loader/tractor operator.

Remember, safety is your business AND your responsibility. Have a good day; have a safe day.

NOTES

This manual is another in a series on the safe operation of machinery published by AEM.
For additional publications visit our web site at www.aem.org.

Association of Equipment Manufacturers
Toll free 1-866-AEM-0442
e-mail aem@aem.org
www.aem.org

FORM WLT03-04
Printed in U.S.A.

Index

Numerical

14-pin socket 140

A

Air pressure table for approved tires 216
Attachment
Coupling with hydraulic quick hitch system 132
Attachments
Floating position 128
Fork-and-grab attachment 149
Level indicator 145
Light-weight materials bucket 145
Maintenance 190
Operating hydraulic connections in continuous operation 137
Pallet fork 150
Automatic trailer coupling
Operation 116

B

Battery
Disassemble 210
Maintenance 210
Master switch 90
Starting aid/jump-starting 97
Battery disconnect switch 90
Blocking articulated pendulum joint 161

C

Cab
Breather filter 193
Doors 60
Side window 62
Changing wheels 217
Check the brake fluid 185
Checking hydraulic oil level 183
Checking the belts 212
Clean the vehicle from the outside 192
Conversion table 228
Cooling system
Clean the radiator 196
Coolant compound table 182
Malfunctions 220
Crane-lifting 162

D

Dimensions 229
Display
Display for inspections 80, 170
Display for inspections 80, 170
Drive interlock 93
Driving
Speed limiter 109
Driving mode
AUTO mode 110
Eco mode 110
M-Drive mode 110
Driving modes
Attachment mode 110

E

Attachments 145
Electrical system
Battery 209
Maintenance 208
Emergency lowering 130
Engine
Air filter 197
Capacities/Specification 174
Malfunctions 219
Parking 96
Preheating 91
Start 92
Error message
Indications 218
Excavation work 146
Explanation of symbols 10

F

Filling up the washer system 186
Floating position 128
Fluids and lubricants 174
Fuel system
Capacities/Specification 174
Malfunctions 219
Fuse assignment 201

H

Hydraulic system
- Capacities/Specification 174
- Hydraulic oil 184
- Malfunctions 220
- Preheating 91
- Technical data 231

I

Inflate tires 215
Inspection work 173

J

Joystick
- Lock function 126

K

Key to the symbols 10

L

Labels
- Other type labels 49

Level indicator for attachments 145
Lightweight material/earth bucket
- Excavation work 146
- Loading work 146
- Working with load hooks 147

Loading work 146
Lubrication plan 187

M

Maintenance
- Air pressure table for approved tires 216
- Attachments 190
- Bleeding the hydraulic system 184
- Braking system 200
- Check the brake fluid 185
- Display for inspections 80, 170
- Fluids and lubricants 174
- General visual inspection 173
- Hydraulic oil 184
- Lubricate 187
- Servicing the battery 210
- Tires 214

Malfunctions 218
- Cooling system 219
- Drive system 220
- Engine 219
- Error codes 223
- Hydraulic system 220
- Vehicle electronics 220

O

Operating the rear hydraulic connections 139
Operation
- 14-pin socket 140
- Emergency lowering 130
- Manual throttle 108
- Parking brake 102
- Standard hydraulic connections in continuous operation 137
- Work light 119

Operator’s manual
- Explanation of symbols 10

P

Parking brake emergency release device 156
PDI 237
Putting into operation
- Requirements 88

R

Rear window wiper 122
Refill hydraulic oil 184
Route warning device
- Audible reverse travel warning device 106

S

Safety instructions
- Symbols 18

Setting
- Pallet fork 151
- Steering wheel 70

Side window 62
Speed limiter 109
Operation 109
Starting aid/jump-starting 97
Starting the engine 92
Symbols
Safety instructions 18

T

Teach the starting key again 93
Technical data
Dimensions 229
Hydraulics 231
Tightening torques for wheels 217
Towing 154
Towing gear 158
Trailer coupling
Automatic 116

V

Vehicle
Cleaning 191
Dimensions 229
load with crane 163
Loading 160
Lubricate 187
Towing 157
Transport 163
Vehicle electronics
Fault 220

W

Work operation 143
Working hydraulics
Lock 126

Notes

Notes

Notes

Wacker Neuson SE
Preußenstraße 41
D-80809 München

Tel.: +49 800 7831 8506
Email: info@wackerneuson.com
www.wackerneuson.com

Material Number: 1000519116
Language: [en-US]